marantz®

Model SR-14mkⅡ User Guide

AV Surround Receiver

ENGLISH

WARRANTY

For warranty information, contact your local Marantz distributor.
RETAIN YOUR PURCHASE RECEIPT
Your purchase receipt is your permanent record of a valuable purchase. It should be kept in a safe place to be referred to as necessary for insurance purposes or when corresponding with Marantz.

IMPORTANT

When seeking warranty service, it is the responsibility of the consumer to establish proof and date of purchase. Your purchase receipt or invoice is adequate for such proof.

FOR U.K. ONLY

This undertaking is in addition to a consumer's statutory rights and does not affect those rights in any way.

FRANÇAIS

GARANTIE

Pour des informations sur la garantie, contacter le distributeur local Marantz.

CONSERVER L'ATTESTATION D'ACHAT

L'attestation d'achat est la preuve permanente d'un achat de valeur. La conserver en lieu sur pour s'y reporter aux fins d'obtention d'une couverture d'assurance ou dans le cadre de correspondances avec Marantz.

IMPORTANT

Pour l'obtention d'un service couvert par la garantie, il incombe au client d'établir la preuve de l'achat et d'en corroborer la date. Le reçu ou la facture constituent des preuves suffisantes.

DEUTSCH

GARANTIE

Bei Garantiefragen wenden Sie sich bitte an Ihren Marantz-Händler.

HEBEN SIE IHRE QUITTING GUT AUF

Die Quittung dient Ihnen als bleibende Unterlage für Ihren wertvollen Einkauf Das Aufbewahren der Quittung ist wichtig, da die darin enthaltenen Angaben für Versicherungswecke oder bei Korrespondenz mit Marantz angeführt werden müssen.

WICHTIG!

Bei Garantiefragen muß der Kunde eine Kaufunterlage mit Kaufdatum vorlegen. Ihren Quittung oder Rechnung ist als Unterlage ausreichend.

NEDERLANDS

GARANTIE

Voor inlichtingen omtrent garantie dient u zich tot uw plaatselijke Marantz.

UW KWITANTIE, KASSABON E.D. BEWAREN

Uw kwitantie, kassabon e.d. vormen uw bewijs van aankoop van een waardevol artikel en dienen op een veilige plaats bewaard te worden voor evt, verwijzing bijv, in verbend met verzekering of bij correspondentie met Marantz.

BELANGRIJK

Bij een evt, beroep op de garantie is het de verantwoordelijkheid van de consument een gedateerd bewijs van aankoop te tonen. Uw kassabon of factuurzijn voldoende bewijs.

ESPAÑOL

GARANTIA

Para obtener información acerca de la garantia póngase en contacto con su distribuidor Marantz.

GUARDE SU RECIBO DE COMPRA

Su recibo de compra es su prueba permanente de haber adquirido un aparato de valor, Este recibo deberá guardarlo en un lugar seguro y utilizarlo como referencia cuando tenga que hacer uso del seguro o se ponga en contacto con Marantz.

IMPORTANTE

Cuando solicite el servicio otorgado por la garantia el usuario tiene la responsabilidad de demonstrar cuá¥do efectuó la compra. En este caso, su recibo de compra será la prueba apropiada.

ITALIANOI

Condizioni di garanzia

L'apparecchio e' garantito per 365 giorni dalla data di acquisto comprovata da un documento attestante il nominativo del rivenditore e la data di vendita. La garanzia sara' prestata con la sostituzione o riparazione gratuita delle parti difettose.
Non sono coperti da garanzia difetti derivanti da uso improprio, errata installazione, manutenzione effettuata da personale non autorizzato o, comunque, da circostanze che non possano riferirsi a difetti di tunzionamento dell'apparecchio. Sono inoltre esclusi dalla garanzia gli interventi inerenti l'installazione e l'allacciamento agli impianti di alimentazione.
Gli apparecchi verranno riparati presso i nostri Centri di Assistenza. Le spese ed i rischi di trasporto sono a carico del cliente.
La casa costruttrice declina ogni responsabilita' per danni diretti o indiretti provocati dalla inosservanza delle prescrizioni di installazione, uso e manutenzione dettagliate nel presente manuale.
Per informazioni sull'abbonamento al Servizio Assistenza postgaranzia e per conoscere l'indirizzo dei Centri Assistenza Marantz rivolgetevi al nostro servizio consumatori (telefono 1678-20026 - numero verde).

PORTUGUÊS

GARANTIA

Para informações sobre a garantia, contactar o distribuidor Marantz local.

GUARDAR O RECIBO DE COMPRA

O recibo é o registo permanente da compra que fez. Deve ser guardado num local seguro, para ser apresentado em questões relacionadas com o seguro ou para quando tiver de contactar a Marantz.

IMPORTANTE

Quando procurar assisténcia técnica ao abrigo da garantia, é da responsabilidade do consumidor estabelecer a prova e data de compra. O recibe é prova adequada.

SVENSKA

GARANTI

För information om garantin, kontakta Marantz lokalagent.

SPAR KVITTOT

Kvittot är ett inköpsbevis på en värdefull vara. Det skall förvaras säkert och hänvisas till vid försäkringsfall eller vidkorrespondens mod Marantz.

VIKTIGT

Fö att garantin skall gälla är det kundens sak att framställa bevis och datum om köpet. Kvitto eller faktura är tillräokligt bevis fö detta.

DANSK

GARANTI

Henvend dem til Deres MARANTZ-forhandler angående inrformation om garantien.

GEM DERES KVITTERING

Deres købskvittering er Deres varige bevis på et dyrt køb. Den bør gemmes godt og anvendes som bevis, hvis De vil tegne en forsikring, eller hvis De kommunikerer med Marantz.

VIGTIGT

Det påhviler forbrugeren at skaffe bevis for købet og købsdatoen, hvis han eller hun ønsker garantiservice. Deres købskvittering eller faktura er et fuldgyldigt bevis herpå.

CE MARKING

CE **English**
The SR-14mkII is in conformity with the EMC directive and low-voltage directive.

CE **Français**
Le SR-14mkII est conforme à la directive EMC et à la directive sur les basses tensions.

CE **Deutsch**
Das Modell SR-14mkII entspricht den EMC-Richtlinien und den Richtlinien für Niederspannungsgeräte.

CE **Nederlands**
De SR-14mkII voldoet aan de EMC eisen en de vereisten voor laag-voltage.

CE **Español**
El SR-14mkII está de acuerdo con las normas EMC y las relacionadas con baja tensión.

CE **Italiano**
Il SR-14mkII è conforme alle direttive CEE ed a quelle per i bassi voltaggi.

CE **Português**
O SR-14mkII conforma com as diretrizes EMC e de baixa voltagem.

CE **Svenska**
SR-14mkII är tillverkad i enlighet med EMC direktiven och direktiven för lågvoltsutrusning.

CE **Dansk**
Model SR-14mkII er i overensstemmelse med EMC-direktiveet og direktivet om lavspænding.

English
To ventilate the unit, do not install the unit in a rack or bookshelf, and note the followings.
- Do not touch the top of the enclosure during operation.
- Do not block the openings in the enclosure during operation.
- Do not insert objects beneath the unit.
- Do not block the ventilation slots at the top of the unit. Do not place anything about 1 meter above the top panel.
- Make a space of about 0.2 meter around the unit.

Français
Pour que l'appareil puisse être correctement ventilé, ne pas l'installer dans un meuble ou une bibliothèque et respecter ce qui suit.
- Ne pas toucher le dessus du coffret.
- Ne pas obstruer les ouïes de ventilation du coffret pendant le fonctionnement.
- Ne placer aucun objet sous l'appareil.
- Ne pas obstruer les ouães de ventilation du panneau supérieur. Ne placer aucun objet à moins d'un mètre environ du panneau supérieur.
- Veiller à ce qu'aucun objet ne soit à moins de 0,2 mètre des côtés de l'appareil.

Deutsch
Um eine einwandfreie Belüftung des Geräts zu gewährleisten, darf das Gerät nicht in einem Gestell oder Bücherregal aufgestellt werden; die folgenden Punkte sind besonders zu beachten:
- Während des Betriebs das Oberteil des Gehäuses nicht berühren.
- Während des Betriebs die Öffnungen im Gehäuse nicht blockieren.
- Keine Gegenstände in das Gerät einführen.
- Die Belüftungsschlitze an der Oberseite des Geräts dürfen nicht blockiert werden. Darauf achten, daß über dem Gerät ein Freiraum von mindestens 1 meter vorhanden ist.
- Auf allen Geräteseiten muß ein Zwischenraum von ungefähr 0,2 meter vorhanden sein.

Nederlands
Installeer het toestel niet in een rek of boekenkast waar de ventilatie mogelijk wordt gehinderd. Let tevens op de volgende punten:
- Raak de bovenkant van het toestel niet aan als het in gebruik is.
- Blokkeer de openingen van het toestel niet als het in gebruik is.
- Plaats geen onderwerpen onder het toestel.
- Blokkeer de ventilatie-openingen aan de bovenkant van het toestel niet. Zorg dat er tenminste 1 meter vrije ruimte boven het toestel is.
- Zorg dat er 0,2 meter vrije ruimte rond het toestel is.

Español
Para ventilar la unidad no la instale en una estantería ni estante para libros, y tenga en cuenta lo siguiente:
- No toque la parte superior de la caja durante el funcionamiento.
- No tape las ranuras en la caja durante el funcionamiento
- No ponga objetos debajo de la unidad.
- No tape las ranuras de ventilación de la parte superior de la unidad. No ponga nada a menos de 1 metro por encima del panel superior.
- Deje un espacio de unos 0,2 metro alrededor de la unidad.

Italiano
Perch é l'unità possa essere sempre ben ventilata, non installarla in scaffali o librerie e tenere presente quanto segue.
- Non toccare la parte superiore del rivestimento durante il funzionamento.
- Non bloccare le aperture sul rivestimento durante il funzionamento.
- Non inserire oggetti al di sotto dell'unità.
- Non bloccare le fessure di ventilazione sopra l'unità. Non posare nulla per circa un metro sopra il pannello superiore.
- Lasciare 0,2 metro liberi tutto intorno l'unità.

Português
Para ventilar o aparelho, não instalá-lo dentro duma estante ou algo similar, e observar as seguintes recomendações:
- Não tocar a parte superior do aparelho durante a operação.
- Não bloquear as aberturas do aparelho durante a operação.
- Não insertar objectos debaixo do aparelho.
- Não bloquear as aberturas de ventilação na parte de cima do aparelho. Deixar um espaço completamente livre de cerca de 1 metro acima do painel superior.
- Deixar um espaço de cerca de 0,2 metro ao redor do aparelho.

Svenska
För att ventilera enheten, ställ den inte i ett ställ eller bokhylla och tänk på följande.
- Vidrör inte ytterhöljets ovansida under pågående drift.
- Blockera inte öppningarna i ytterhöljet under pågående drift.
- Stick inte in föremål under enheten.
- Blockera inte ventialtionshålen ovanpå enheten. Placera inte någonting närmare än 1 meter ovanför apparaten eller enheten.
- Se till att det finns omkring 0,2 meter fri plats runt omkring enheten.

Dansk
Anbring ikke apparatet i et rack eller en boghylde, da dette kan bloke luftcirkulationen omkring apparatet. Iagttag ligeledes følgende:
- Berør ikke oversiden af kabinettet under anvendelsen.
- Bloker ikke åbningerne i kabinettet under anvendelsen.
- Stik ikke genstande ind under apparatet.
- Bloker ikke ventilationsåbningerne ovenpå apparatet. Anbring ikke noget nærmere end 1 m over apparatets overside,
- Sørg for, at der er et frit område på omkring 0,2 m omkring apparatet.

VIDEO SYSTEM CONNECTIONS FOR VIDEO COMPONENTS

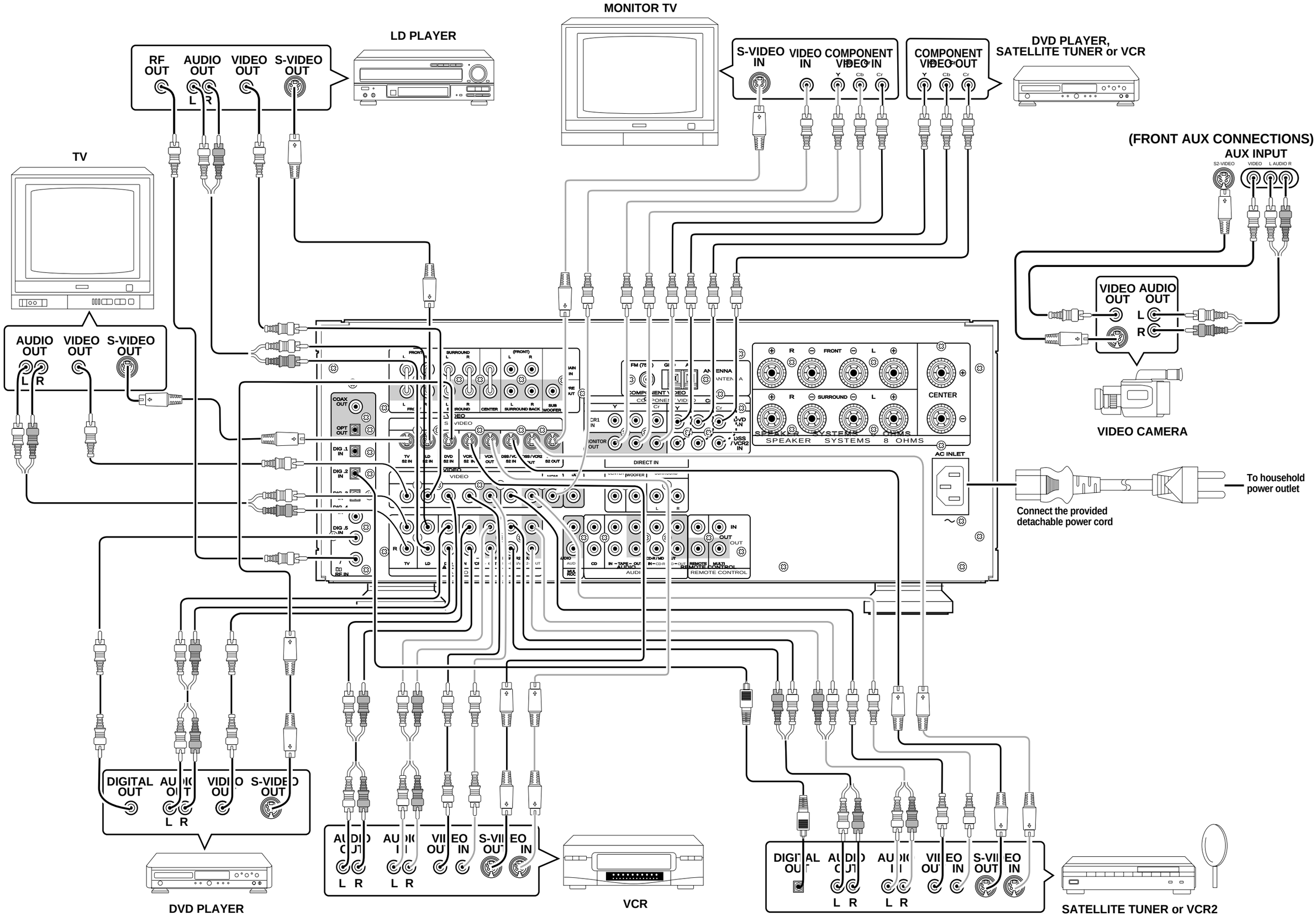

AUDIO SYSTEM CONNECTIONS FOR AUDIO COMPONENTS

FM EXTERNAL ANTENNA

FM FEEDER ANTENNA

AM LOOP ANTENNA

AM EXTERNAL ANTENNA

¥ When using the FM antenna attach to this apparatus

SUBWOOFER AMPLIFIER MA6100

NORMAL INPUT

INVERT OUTPUT

SUBWOOFER

SPEAKER SYSTEM

CENTER SPEAKER

Left

Right

Surround Left

Surround Right

Surround Back Left

Surround Back Right

SURROUND SPEAKER

Assemble the AM loop antenna as shown in the figure before use

CD PLAYER

OUTPUT

L

R

DIGITAL OUTPUT

Suuround Back AMPLIFIER MA6100

CD Recorder

DIGITAL INPUT

DIGITAL OUTPUT

MD PLAYER

DIGITAL INPUT

Refer to OTHER CONNECTIONS (Page iii)

MULTI ROOM

IR RECEIVER

INPUT

MULTI ROOM SPEAKER

LINE IN

RC IN

L

R

(L) (R)

MAIN AMP (For MULTI ROOM)

MONITOR TV for MULTI ROOM

VIDEO IN

To a component with REMOTE (Marantz RC-5 D-BUS) jacks Refer to OTHER CONNECTIONS (Page iii)

OUT IN

L

R

TAPE DECK

CD RECORDER/MD PLAYER

MULTI ROOM

OTHER CONNECTIONS
(Connectio with external 3ch amplifiers for Front-L, Front-R and subwoofer)

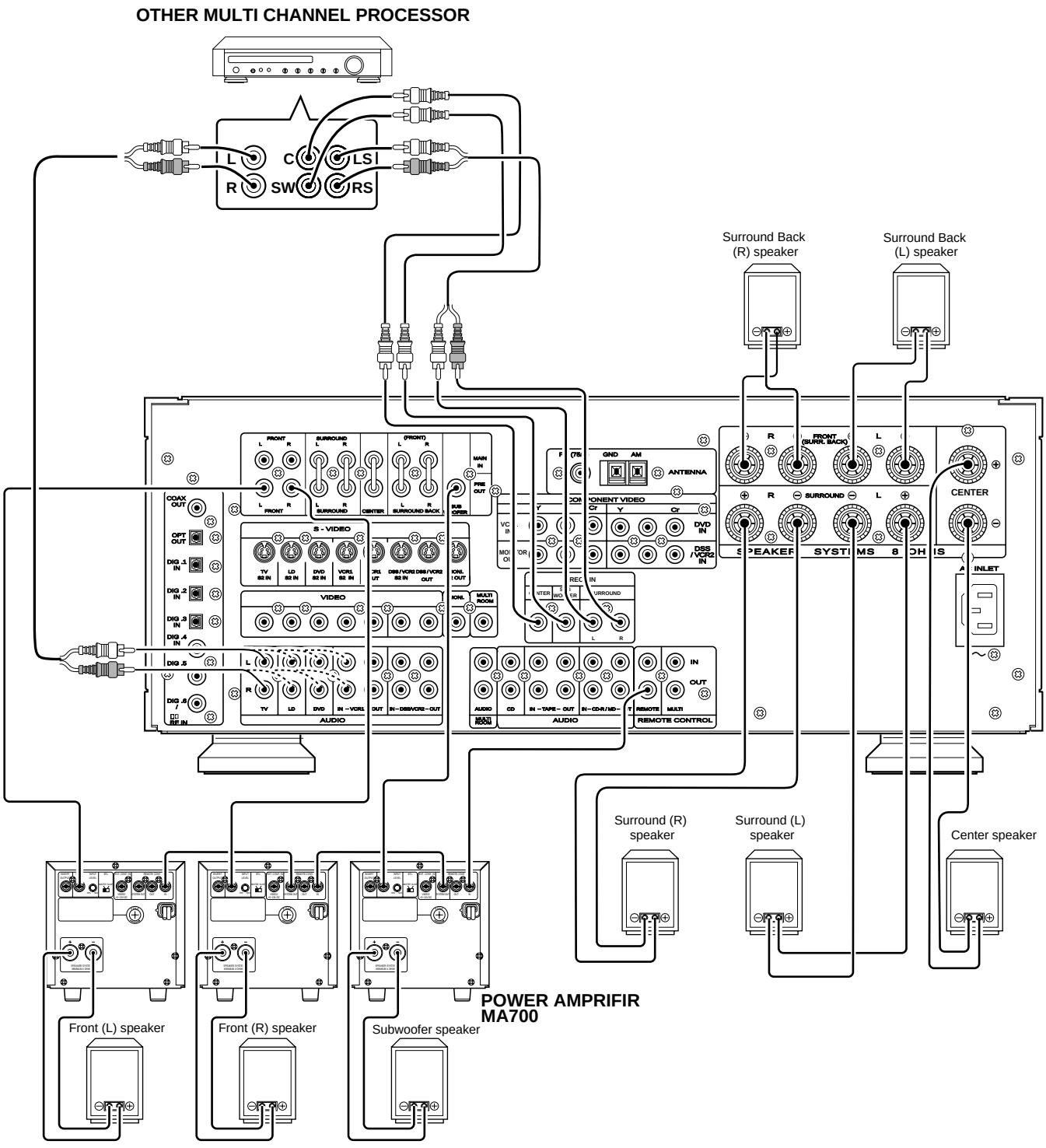

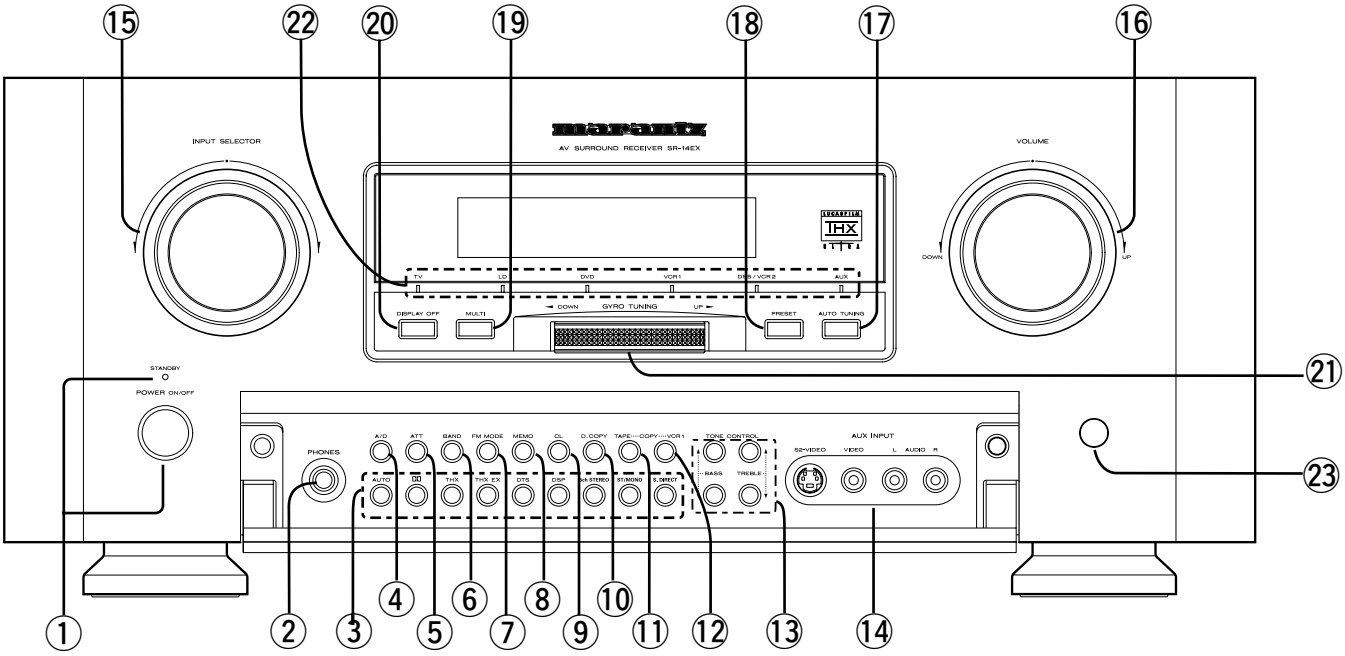
15
22
20
19
18
17
16
INPUT SELECTOR
AV SURROUND RECEIVER SR-14EX
VOLUME
DOWN
UP
TV
LD
DVD
VCR1
DVR / VCR2
AUX
DISPLAY OFF
MULTI
GYRO TUNING
PRESET
AUTO TUNING
21
STANDBY
POWER ON/OFF
PHONES
A/D
ATT
BAND
FM MODE
MEMO
CL
D.COPY
TAPE---COPY---VCR1
TONE CONTROL
BASS
TREBLE
AUX INPUT
S2-VIDEO
VIDEO
L
AUDIO
R
23
1
2
3
4
5
6
7
8
9
10
11
12
13
14

RC5000i

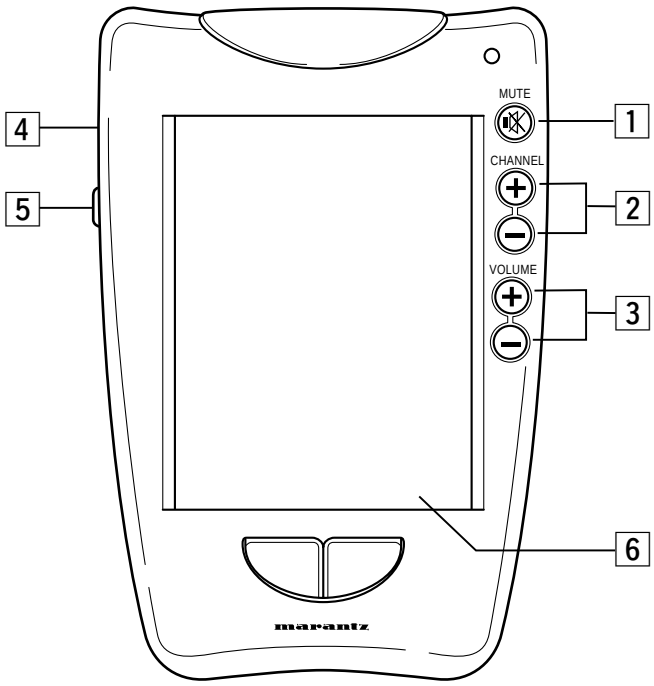
MUTE
CHANNEL
VOLUME
4
5
1
2
3
6
marantz

TABLE OF CONTENTS

INTRODUCTION **3**
DESCRIPTION **3**
FEATURES **4**
FRONT PANEL FEATURES **5**
DISPLAY **7**
REAR PANEL CONNECTIONS **8**
REMOTE CONTROL UNIT RC5000I **10**
OPERATION OF REMOTE CONTROL UNIT 12
SETUP **13**
ON SCREEN DISPLAY MENU SYSTEM 13
OSD MENU SYSTEM 14
SPEAKERS SETUP AND LEVELS SETUP 14
ON SCREEN DISPLAY INFOMATION 17
BASIC OPERATION **18**
LISTENING TO THE TUNER 18
RDS OPERATION (FOR S VERSION ONLY) 19
PLAYBACK OPERATION 20
OTHER FUNCTIONS **21**
MULTI ROOM SELECTOR 21
TV AUTO ON/OFF FUNCTION 21
SETTING THE SLEEP TIMER (ONLY REMOTE CONTROL UNIT) 21
SURROUND MODES **22**
TROUBLESHOOTING **25**
TECHNICAL SPECIFICATIONS **27**

FOREWORD

This section must be read before any connection is made to the mains supply.

WARNINGS

Do not expose the equipment to rain or moisture.
Do not remove the cover from the equipment.
Do not push anything inside the equipment through the ventilation holes.
Do not handle the mains lead with wet hands.

EQUIPMENT MAINS WORKING SETTING

Your Marantz product has been prepared to comply with the household power and safety requirements that exist in your area. SR-14mkII can be powered by 230 V AC only.

IMPORTANT:

This apparatus is fitted with an approved moulded 13 Amp plug.
To change a fuse in this type of plug proceed as follows:

1. Remove fuse cover and fuse.
2. Fix new fuse which should be a BS1362 13A, A.S.T.A. or BSI approved type.
3. Refit the fuse cover.

If the fitted plug is not suitable for your socket outlets, it should be cut off and an appropriate plug fitted in its place.
If the mains plug contains a fuse, this should have a value of 13A. If a plug without a fuse is used, the fuse at the distribution board should not be greater than 5A.

Note:
The severed plug must be destroyed to avoid a possible shock hazard should it be inserted into a 13A socket elsewhere.

How to connect a plug

The wires in the mains lead are coloured in accordance with the following code:
BLUE—"NEUTRAL" ("N")
BROWN—"LIVE" ("L")

1. The BLUE wire must be connected to the terminal which is marked with the letter "N" or coloured BLACK.
2. The BROWN wire must be connected to the terminal which is marked with the letter "L" or coloured RED.
3. Do not connect either wires to the earth terminal in the plug which is marked by the letter "E" or by the safety earth symbol or coloured green or green-and-yellow.

Before replacing the plug cover, make certain that the cord grip is clamped over the sheath of the lead — not simply over the two wires.

COPYRIGHT

Recording and playback of any material may require consent. For further information refer to the following:

— Copyright Act 1956
— Dramatic and Musical Performers Act 1958
— Performers Protection Acts 1963 and 1972
— any subsequent statutory enactments and orders

ABOUT THIS USER GUIDE

Refer to the figures on page 2 of this user guide. The numbers on the figurescorrespond to those in the text. All references to the connections and controls that are printed in **BOLD** type are as they appear on the unit.

PRECAUTIONS

The following precautions should be taken when operating the equipment.

GENERAL PRECAUTIONS

When siting the equipment ensure that:

— the ventilation holes are not covered;
— air is allowed to circulate freely around the equipment
— it is on a vibration free-surface;
— it will not be exposed to interference from an external source;
— it will not be exposed to excessive heat, cold, moisture or dust;
— it will not be exposed to direct sunlight;
— it will not be exposed to electrostatic discharges

Never place heavy objects on the equipment.
If a foreign body or water does enter the equipment, contact your nearest dealer or service centre.
Do not pull out the plug by pulling on the mains lead, hold the plug. It is advisable when leaving the house, or during a thunderstorm, to disconnect the equipment from the mains supply.

PRECAUTIONS IN CONNECTION

- Be sure to unplug the power cable from the AC outlet or turn off the POWER/STANDBY switch before proceeding with any connection.
- Connect one cable at a time observing the "input" and "output".

  This will avoid any cross connection between channels and signal inputs and outputs.
- Insert the plugs securely. Incomplete connection may result in noise.
- Prior to connecting other audio and video equipment to the SR-14mkII, please read their owner's manuals.

INSTALLATION

If this unit or another electronic device incorporating a microcomputer is used at the same time with the tuner or television, picture disturbance or noise may occur. In such a case, install the unit according to the following guide points.

- Separate the unit as far as possible from the tuner or television.
- Place the antenna wire for the tuner or TV apart from the power cable and audio and video connection cables of this unit.
- Since the phenomenon is likely to occur when using an indoor antenna and/or 300-ohm feeder wire, we recommend using an outdoor antenna and 75-ohm coaxial cable.

INTRODUCTION

Thank you for purchasing the Marantz SR-14mkII THX/ DTS/Dolby Digital Surround receiver. This remarkable component has been engineered to provide you with many years of home theater enjoyment. Please take a few minutes to read this manual thoroughly before you connect and operate the SR-14mkII. As there are a number of connection and configuration options, you are encouraged to discuss your own particular home theater setup with your Marantz A/V specialist dealer.

DESCRIPTION

THX® is an exclusive set of standards and technologies established by the world-renowned film production company, Lucasfilm Ltd. THX resulted from George Lucas' desire to reproduce the movie soundtrack as faithfully as possible both in the movie theater and in the home theater.
THX engineers developed patented technologies to accurately translate the sound from a movie theater environment into the home, correcting the tonal and spatial errors that occur.
When the THX mode of the SR-14mkII is on, three distinct THX technologies are automatically added:
Re-Equalization-restores the correct tonal balance for watching a movie in a home environment.
These sounds are otherwise mixed to be brighter for a large movie theater. Re-EQ compensates for this and prevents the soundtracks from being overly bright and harsh when played in a home theater.
Timbre Matching-filters the information going to the surround speakers so they more closely match the tonal characteristics of the sound coming from the front speakers.
This ensures seamless panning between the front and surround speakers.
Adaptive Decorrelation-slightly changes one surround channel's time and phase relationship with respect to the other surround channel.
This expands the listening position and creates with only two surround speakers the same spacious surround experience as in a movie theater with multiple surround speakers.
The Marantz SR-14mkII was required to pass a rigorous series of quality and performance tests, in addition to incorporating the technologies explained above, in order to be THX Ultra certified by Lucasfilm Ltd.
THX Ultra requirements cover every aspect of performance including pre-amplifier and power amplifier performance and operation, and hundreds of other parameters in both the digital and analog domain.
Movies which have been encoded in Dolby Digital, DTS, Dolby Pro Logic, stereo and Mono will all benefit from the THX mode when being viewed.
The THX mode should only be activated when watching movies which were originally produced for a movie theater environment.
THX need not be activated for music, movies made especially for TV, or shows such as sports programming, talk shows, etc.
This is because they were originally mixed for a small room environment.

"Lucasfilm®" and "THX®" are registered trademarks of Lucasfilm Ltd.

THX SURROUND EX

THX Surround EX - Dolby Digital Surround EX is a joint development of Dolby Laboratories and the THX division of Lucasfilm Ltd.

In a movie theater, film soundtracks that have been encoded with Dolby Digital Surround EX technology are able to reproduce an extra channel which has been added during the mixing of the program.
This channel, called Surround Back, places sounds behind the listener in addition to the currently available front left, front center, front right, surround right, surround left and subwoofer channels.
This additional channel provides the opportunity for more detailed imaging behind the listener and brings more depth, spacious ambience and sound localization than ever before.
Movies that were created using the Dolby Digital Surround EX technology when released into the home consumer market may exhibit a Dolby Digital Surround EX logo on the packaging.
A list of movies created using this technology can be found on the Dolby web site at
http ://www.dolby.com.

"SURROUND EX ™" is a trademark of Dolby Laboratories. Used under authorization.

Dolby Digital lets you enjoy Digital TV, Digital Satellite as well as DVD, LD software in digital surround, which is the next step above Dolby Pro Logic.
In comparison with Dolby Pro Logic, Dolby Digital can provide separate left surround and right surround channels, for more precise localization of sounds and a more convincing, realistic ambience.
And, with Dolby Digital, all five main channels can be full ranged and a subwoofer can be added to each channel , if desired.
By providing up to 5.1channels of digital audio independently, Dolby Digital lets you enjoy better sound quality and more powerful presence than conventional Dolby Surround.

"Dolby", "AC-3", "Pro Logic" and the double-D symbol are trademarks of Dolby Laboratories.

DTS was introduced in 1994 to provide 5.1 channels of discrete digital audio into home theater systems.
DTS brings you premium quality discrete multi-channel digital sound to both movies and music.
DTS is a multi-channel sound system designed to create full range digital sound reproduction.
The no compromise DTS digital process sets the standard of quality for cinema sound by delivering an exact copy
of the studio master recordings to neighborhood and home theaters.
Now, every moviegoer can hear the sound exactly as the moviemaker intended.
DTS can be enjoyed in the home for either movies or music on of DVD's, LD's, and CD's.

"DTS" and "DTS Digital Surround" are trademarks of Digital Theater Systems, Inc.

HDCD® (High Definition Compatible Digital ®) is a patented process for delivering on Compact Disc the full richness and details of the original microphone feed.
HDCD encoded CDs sound better because they are encoded with 20-bits of real musical information as compared to 16-bits for all other CDs.
HDCD overcomes the limitation of the 16-bit CD format by using a sophisticated system to encode the additional four bits onto the CD while remaining completely compatible with the CD format.
When listening to HDCD recordings, you hear more dynamic range, a focused 3-D sound stage, and extremely natural vocal and musical timbre. With HDCD, you get the body, depth and emotion of the original performance not a flat, digital imitation.

HDCD ®, HDCD®, High Definition Compatible Digital ® and Pacific Microsonics™ are either registered trademarks or trademarks of Pacific Microsonics, Inc. in the United States and/or other countries. HDCD system manufactured under license from Pacific Microsonics, Inc. This product is covered by one or more of the following: In the USA: 5,479,168, 5,638,074, 5,640,161, 5,808,574, 5,838,274, 5,854,600, 5,864,311, 5,872,531, and in Australia: 669114. Other patents pending.

FEATURES

- THX SURROUND EX decoding to reproduce an extra channel which has been added during the mixing of the program.
- Dolby Digital and DTS surround sound decoding, plus THX Cinema processing, Dolby Pro Logic decoding and a variety of additional surround modes.
- HDCD decoding capability to deliver the full sonic benefits of HDCD-encoded CDs from a standard non-HDCD CD player when connected to the SR-14mkII via the player 's digital output.
- 96 kHz/ 24 bit decoding for highest possible fidelity and bandwidth, and high-resolution playback of 96 kHz/ 24 bit PCM audio sources.
- Poly Silicon high resolution 8 ch Volume control
- Selectable main input terminals (L/R or Surr.Back L/R)
- 140 watts to each of the five main channels; the power amp section features an advanced, premium high- storage power supply capacitors, and fully discrete output stages housed in cast aluminum heat sinks .
- High Definition Amplifier Module (HDAM) discrete pre-amp output stages.
- 7.1 channel pre-amp outputs for connection to external components such as a subwoofer and external power amplifiers.
- Six-channel direct inputs accommodate future surround sound formats or an external digital decoder.
- Six Digital inputs, for connection to other sources, such as DVD, DSS, CD or LD.
- Two Digital outputs for connection to CD-R or MD.
- High-quality AM/FM tuner with 50 station presets.
- Source Direct switch bypasses, tone controls and bass management for purest audio quality.
- Three sets of Y/Pr/Pb component video inputs and component video outputs provide unsurpassed video quality and switching flexibility from component video sources.
- On- Screen- Display with both Composite and “S” video.
- Front panel A/V inputs, with S-video .
- Easy to use on-screen menu.
- Multi-room capability offers independent control of a second room audio and video system.
- Supplied with RC5000i programmable learning remote control.

FRONT PANEL FEATURES (SEE PAGE iv)

① POWER switch and STANDBY indicator

You can turn on and off the unit's power using the front panel power switch.
However, if you turn the unit off with the front panel switch, the unit goes completely off rather than to the "standby mode" (Red LED indicator light glows in the standby mode).
The unit cannot be turned on with the remote control when it is not in the standby mode. When the red LED is on, the unit can be turned on via the remote control or by pressing any input selector button on the front panel.

② PHONES jack for stereo headphones

This jack may be used to listen to the SR-14mkII's output through a pair of headphones. Be certain that the headphones have a standard 1 /4" stereo phone plug. Note that the main room speakers will automatically be turned off when the headphone jack is in use.

Notes:

- When using headphones, the surround mode will automatically change to **STEREO** .
- The surround mode returns to the previous setting as soon as the plug is removed from the jack.

③ Surround MODE buttons

(AUTO, DD (DOLBY), THX, THX-EX, DTS, DSP, 5CH STEREO, STEREO/MONO , S-DIRECT)

Press the desired button to select surround mode.

AUTO :

The receiver determines whether the digital input signal is Dolby Digital, PCM-audio , HDCD or DTS.

DD :

This mode is used with source materials encoded in Dolby Digital and Dolby Surround.

THX (THX Cinema or THX EX) :

THX Cinema mode applies additional processing to Dolby Digital, DTS, and Dolby Pro Logic multi-channel surround sources. Use the THX Cinema mode for all movies on disc, tape or broadcast.

THX-EX :

THX Surround EX will operate for any 5. 1 channel source whenever THX is activated.

DTS (Cinema or Music) :

This mode is for DTS encoded source materials such as LASER DISC, CD, and DVD. Press this button to select DTS-Cinema mode. Press it again to select DTS-Music mode.

DSP (HALL, MATRIX, MOVIE):

These modes apply additional surround processing to each source for theater, concert hall and stadium like atmospheres. Choice desired effect by pressing this button.

5CH STEREO:

This mode is used to create a wider, deeper and more natural soundstage from two channel source material.

STEREO/ MONO :

STEREO mode bypasses all surround processing.

MONO mode is intended for use with old movies, televisions shows and other programs that have a monaural sound track.

S. (Source) DIRECT :

In the source direct mode, the tone control circuit and bass management configuration are bypassed for full range frequency response and the purist audio reproduction.

(See page 22 for more information about surround modes.)

④ A/D (Analog/Digital) SELECTOR BUTTON

This is used to select between the analog and digital inputs.

Note:

- This button is not used for an input source that is not set to a digital input in the system setup2/2.

⑤ ATT (Attenuate) button

If the selected analog audio input signal is greater than the capable level of internal processing, PEAK indicator will light. If this happens, you should press the ATT button. "ATT" is displayed when this function is activated.
The signal-input level is reduced by about the half. Attenuation will not work with the output signal of "REC OUT" (TAPE, CD-R/MD, VCR1 and DSS/VCR2 output). This function is memorized for each individual input.

⑥ BAND (Tuner Band Selector) button

Press this button to switch the tuner between AM or FM.

⑦ FM MODE button

Press this button to select the auto stereo mode or mono mode when the FM band is selected. The AUTO indicator lights in the auto stereo mode.

⑧ MEMO (memory) button

Press this button to enter the tuner preset memory numbers or station names.

⑨ CL (Clear) button

Press this button to cancel the station-memory setting mode or preset scan tuning.

⑩ D. (Digital) COPY button

Press this button for digital dubbing to a CD-R recorder or MD deck. When this button is pressed, the digital source of the DIGITAL OUTPUT is switched in the following sequence.

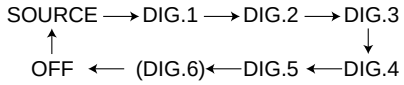

⑪ TAPE COPY button

Press this button for audio dubbing to a tape deck.
When this button is pressed, the source from the TAPE OUT is switched in the following sequence.

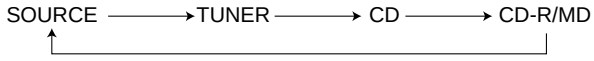

⑫ VCR1 COPY button

Press this button for video and audio dubbing to a VCR1 deck.
When this button is pressed, the source from the VCR1 OUT is switched in the following sequence.

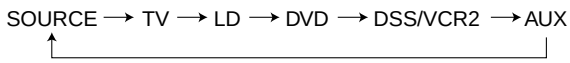

⑬ BASS and TREBLE tone controls

These controls are used to boost or cut high and low frequencies.
TREBLE: Adjusts the tone of high-frequency sound.
BASS: Adjusts the tone of low-frequency sound.
press the up and down keys simultaneously to set . flat frequency response

Notes:

- These buttons are disable in THX CINEMA mode,THX SURROUND EX mode and Source Direct mode.
- Additionally these are not effective during playback of a HDCD signal or 96k PCM audio signal.

⑭ AUX input jacks

These auxiliary video/audio input jacks accept the connection of a camcorder, portable VCR, etc.

⑮ INPUT SELECTOR knob

When this knob is turned, the input signal is switched in the following sequence.

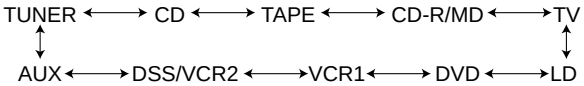

This knob can also be used to turn the unit's power on when it is in the standby mode.

⑯ VOLUME control knob

Adjusts the overall sound level. Turning the control clockwise increases the sound level.

⑰ AUTO TUNING button

When this button is pressed and the **GYRO TUNING** knob is turned quickly, the frequency is scanned while turning the **GYRO TUNING** knob. The Auto scan function starts when the **GYRO TUNING** knob is stopped.

⑱ PRESET BUTTON

Press this button to display the preset number. The preset number is changed by turning the **GYRO TUNING** knob.

⑲ MULTI (Multi Room) button

Press this button to activate the Multiroom system . "MULTI " indicator will light in the display.

⑳ DISPLAY OFF button

When this button is pressed, the display is turned off and the display off indicator lights up (DISP). Press this button again to turn the display ON again.

㉑ GYRO TUNING knob

Turn this knob to change the frequency or the preset number. The station name can be selected with this knob.

㉒ VIDEO SOURCE indicator

Indicates video source currently selected.

㉓ INFRARED SENSOR window

This window receives infrared signals from the remote control unit.

DISPLAY

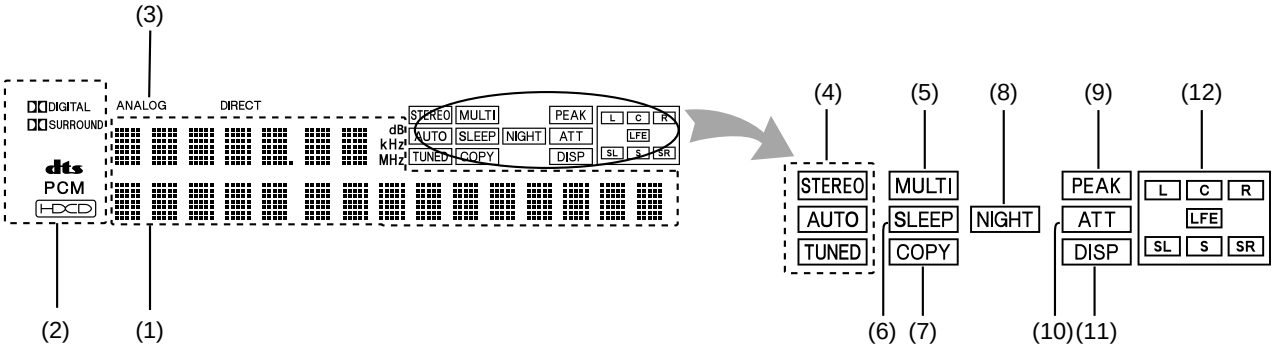

(1) Main Information Display

This display shows messages relating to the status, input source, surround mode, tuner, volume level or other aspects of unit's operation.

(2) ENCODED SIGNAL indicators

DIGITAL, SURROUND, dts, PCM, and **HDCD**

When the selected input is a digital source, one of these indicators will light to display the specific type of signal in use.

(3) Analog Input Indicator

This indicator lights when an analog input source has been selected.

(4) TUNER's indicators

STEREO :

This indicator illuminates when an FM station is being tuned in stereo.

AUTO :

This indicator illuminates when the tuner's Auto mode is in use.

TUNED :

This indicator illuminates when a station is being received with sufficient signal strength to provide acceptable listening quality.

(5) Multiroom Indicator

This indicator lights when the multiroom system is active.

(6) Sleep Indicator

This indicator lights when the Sleep function is in use.

(7) Copy Indicators

This indicator lights when VCR1 COPY, TAPE COPY, or DIGITAL COPY system is active.

(8) Night Mode Indicator

This indicator lights when the SR-14mkII is in the Night mode, which reduces the dynamic range of digital program material at low volume levels.

(9) PEAK indicator

This indicator is a monitor for an analog audio input signal. If the selected analog audio input signal is greater than the capable level of internal processing, this will light. If this happens, you should press the **ATT** button.

(10) Attenuation indicator

This indicator lights when the attenuation function is active.

(11) Display Off indicator

This indicator lights when the SR-14mkII is in the display off mode.

(12) ENCODED CHANNEL STATUS indicators

These indicators display the channels that are encoded with a digital input signal. If the selected digital input signal is Dolby Digital 5.1ch or DTS 5.1ch, "L", "C", "R", "LS", "RS" and "LFE" will light up.If the digital input signal is 2 channel PCM-audio, "L" and "R" will be displayed. If Dolby Digital 5.1ch signal with Surround EX flag comes in, "L", "C", "R", "LS", "S" , "RS" and "LFE" will show.

REAR PANEL CONNECTIONS

All connections to the rear panel should be made with the entire system powered off.
To avoid errors, it is advisable to connect one cable at a time between the various components.

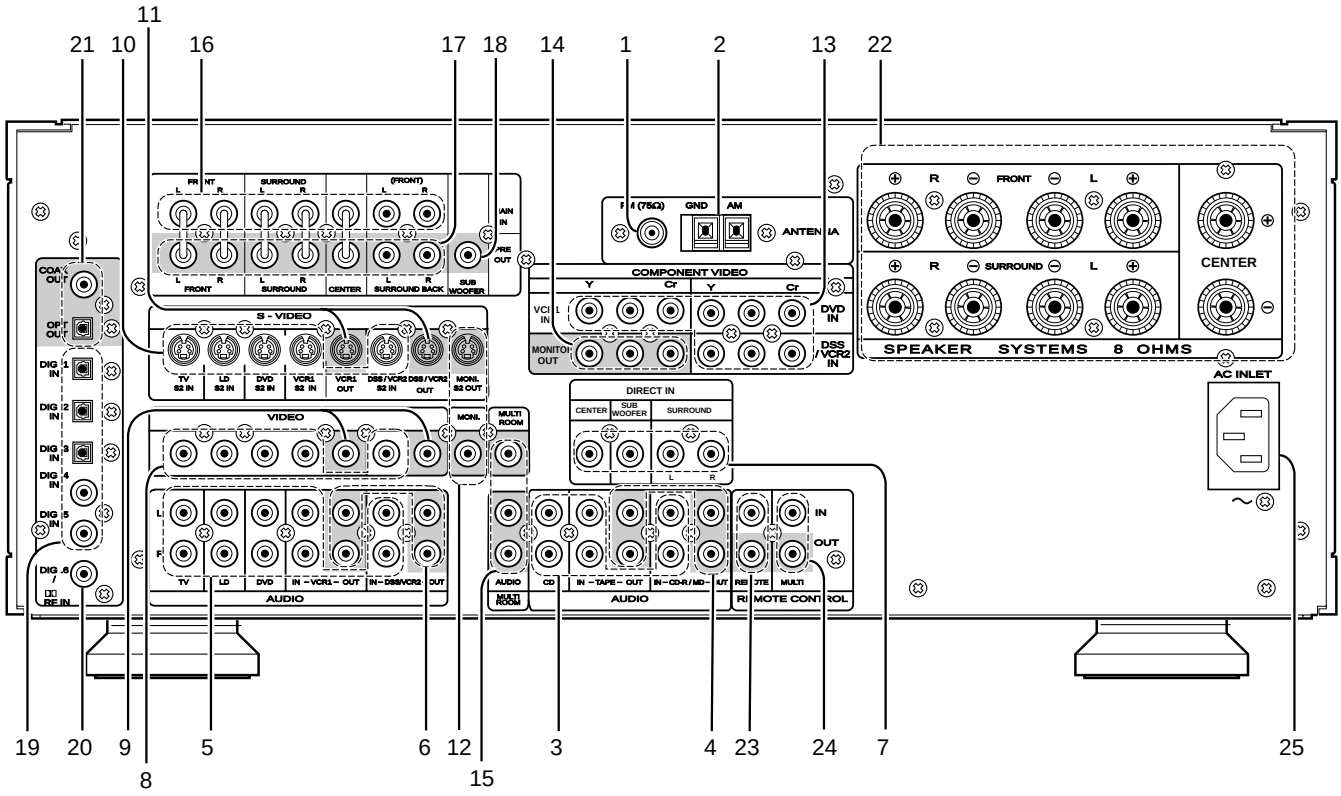

1 FM antenna terminal (75 ohms)

Connect an external FM antenna with a coaxial cable, or a cable network FM source.

2 AM antenna and ground terminals

Connect the supplied AM loop antenna. Use the terminals marked “AM” and “GND”. The supplied AM loop antenna will provide good AM reception in most areas. Position the loop antenna until you hear the best

3 Three analog audio inputs

CD, TAPE, and CD-R/MD :
Connect the audio outputs of your source components to the input jacks on the receiver.

4 Two analog audio outputs for audio source equipment

TAPE and CD-R/MD :
Connect each output to the audio inputs (REC in) of your recording equipment.

5 Five analog audio inputs for video source equipment

TV,LD,DVD, VCR1, and DSS/VCR2 :
Connect each input to the audio outputs of your video source equipment.

6 Two analog audio outputs for video source equipment

VCR1, and DSS/VCR2 :
Connect each output to the audio inputs (REC in) of your video recording equipment.

7 6-Channel Inputs

If an external digital audio decoder is used, connect the outputs of that decoder to these jacks. Note that front L&R channels are common used in analog audio inputs, use the assigned input in OSD setup menu system.
(See page 16 “System setup 1/2”.)

8 Five video inputs

TV,LD,DVD, VCR1, and DSS/VCR2 :
Connect each input to the video outputs of your video source equipment.

9 Two video outputs

VCR1, and DSS/VCR2 :
Connect each output to the video input (REC in) of your video recording equipment.

10 Five S-video inputs

TV,LD,DVD, VCR1,and DSS/VCR2 :
Connect each input to the S-video outputs of your video source equipment.

11 Two S-video outputs

VCR1, and DSS/VCR2 :
Connect each output terminals to S-video input (REC in) of your video recording equipment.

12 Monitor. (VIDEO/S-VIDEO) output jacks

Connect this jack to the composite or S-Video input of a TV monitor or video projector to view the on-screen menus and the output of any standard video source selected by the receiver’s video switcher.

13 Three Component-video inputs

DVD,VCR1,DSS :
Connect the Y/Cr/Cb component video outputs of each your video product to these jacks.

14 Component Video Outputs

Connect these outputs to the component video inputs of a video projector or monitor. When a source connected to one of the three **Component Video Inputs** is selected the signal will be sent to these jacks.

15 Multiroom Outputs (Audio L&R, Video)

Connect these jacks to the optional audio power amplifiers or video display devices to view and listen to the source selected by the mulitroom system in a remote room.

16 Main Amplifier Inputs:

When the jumper pins that link the **Preamp Outputs** with these inputs are removed, these jacks may be used to connect an external source to the internal amplifiers.
Front L/R and (Front L/R) are connected internally. If you desire to use internal the 2ch amplifiers of the front L/R channels for the surround back L & R channel, you may remove the jumper pins for front L/R channels, and then connect between (Front L) and preoutput of Surr Back L channel, (Front R) and preoutput of Surr Back R channel.
An external 2channel amplifier may be connected to the preoutput of the Front L&R channels.
(See page IIi.)

17 Preamp Outputs(L,R,SL,SR,SBL,SBR,C)

When the jumper pins that link the **Amplifier Inputs** with these outputs are removed, these jacks may be connected to an external power amplifier.

18 Subwoofer Output

Connect this jack to the line level input of a powered subwoofer. If an external subwoofer amplifier is used, connect this jack to the subwoofer amplifier input. If you are using two subwoofers, either powered or with a 2 channel subwoofer amplifier, connect a “Y” connector to the subwoofer output jack and run one cable from it to each subwoofer amplifier.

19 Five Digital Inputs (Dig. 1 – 5)

Dig.1,2,3 (Optical), Dig.4,5(Coaxial):
Connect the digital output from a DVD player, HDTV receiver, LD player or CD player to these jacks. The signal may be either a Dolby Digital signal, DTS signal or a standard PCM digital source.

20 Digital 6(AC-3 RF or Coaxial) Input

Connect the AC-3RF output from a LD player and select RF in the OSD system setup menu. If you don’t need an AC3RF input, select COAXIAL in the OSD system setup menu and this terminal will be useable for a coaxial digital input.
(See page 18 “System setup 1/2”.)

21 Digital Audio Outputs (Optical, Coaxial)

Connect these jacks to the matching digital input connector on a digital recorder such as a CD-R or Mini Disc recorder.

22 Speaker outputs terminals

Front L, Front R, Surround L, Surround R and Center:
Connect the these jacks to the matching + or – terminals on your speakers. When making speaker connections, always make certain to maintain correct polarity by connecting the red (+) terminals on the SR-14mkII to the red terminals on the speaker and the black (–) terminals on the SR-14mkII to the black terminals on the speakers. These terminals will accept bare wire or pin connectors. Additionally, your dealer can remove the center plastic “plugs” for you and the terminals will then accept banana plugs as well.

23 Remote control In/Out terminals

INPUT: This connection permits the IR sensor in the receiver to serve other remote controlled devices.
Connect this jack to the “IR IN (RC-5 in)” jack on Marantz or other compatible equipment.

OUTPUT: If the SR-14mkII’s front-panel IR sensor is blocked due to cabinet doors or other obstructions, an external IR sensor may be used. Connect the output of the sensor to this jack.

24 MULTI ROOM Remote In/Out terminals

IN: Connect to multi-room remote control device, available from your Marantz dealer.

OUT: Connect to the Marantz component equipped with remote control (RC-5) terminals in another room .(Second zone).

25 AC INLET

Connect the provided detachable power cord, and connect the AC plug to an unswitched AC wall output.

ENGLISH

REMOTE CONTROL UNIT RC5000i

This chapter describes the functions which control the SR-14mkII. Please look at the user guide of the RC5000i for operation instructions.

1 MUTE button

This button can be used to mute the sound temporarily.

2 CHANNEL UP (+) AND DOWN (-)

These buttons are used to raise and lower the TV or VCR channel.

3 VOLUME UP (+) AND DOWN (-)

These buttons are used to raise and lower the main system or TV volume level.

4 CONTRAST (+, –) dial

This dial is used to adjust the contrast of Touchscreen.

5 BACKLIGHTING button

This button is used to activate the back-lit LCD screen and back-lit keys.

6 TOUCHSCREEN

Touchscreen is used to activate the various functions and operations. The followings describe the PreAmp mode for SR-14mkII.

Source Select

FUNCTION buttons
(DVD, LD, VCR, AUX,DSS,TV, Tuner, CD, TAPE, CD-R/MD,)
These buttons are used for selecting an input function.

SURROUND

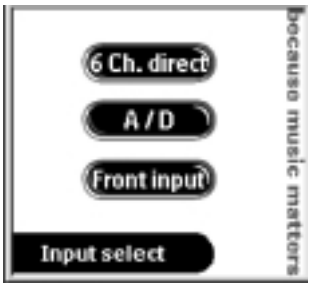

6Ch. direct button
This button is used to play the surround processor which is connected to the DIRECT IN JACKS.

A/D button
This button is used to switch between the analog input and the digital input.

Front input button
This button is used to switch front input (AUX).

SURROUND

Surround mode buttons
(DOLBY, dts, THX, THX Sur EX, Movie, 5 Stereo, Stereo, S-Direct, Hall, Mono,Auto,Matix)
These buttons are used to select the SURROUND mode.

Tonal control

ATT button
This button is used to attenuate for analog input

Night button
This button is used to set night mode. This feature reduces the input level of dolby digital sources by 1/3 to 1/4 at their loudest thresholds, preventing the dynamic range or loud sounds without restricting the dynamic range or volume of other sounds or at less than maximum levels.

Sleep button
This button is used to set the sleep timer.

Treble (^ :up / v : down) buttons
These buttons are used to adjust the tone of high-frequency sound.

Bass (^ :up / v : down) buttons
These buttons are used to adjusts the tone of low-frequency sound.

Display button
This button is used to turn off the display.

Mute On and Off buttons
This button can be used to mute the sound temporarily.

Settings

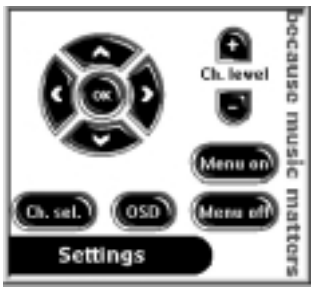

ok, and cursor (^ / v / < / >)buttons
These buttons are used to navigate within on-screen menus.
(Refer to"ON-SCREEN MENU SYSTEM" on page 13-17)

Menu On and Off buttons
These buttons are used to turn on and off the on screen menu system.

CH. Sel button
Press this button to adjust the volume levels of the front, center, surround, subwoofer
channels. Each press of the button changes the channel which can be adjusted.

CH.Level (^ :up / v : down) buttons
Increases or decreases channel level volume
After pressing the CHSel button, use the **^** :up or **v** : down buttons to adjust the volume level of
each speaker channel.

OSD button
This button is used to turn on the On Screen Display for general information.

Power

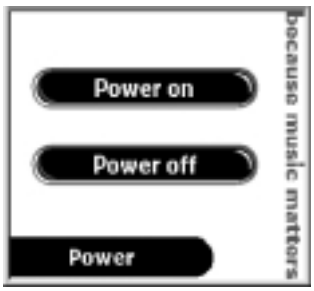

Power on / off buttons
These buttons are used to turn on or off SR-14mkII

Control (Tuner)

Band buttons
These buttons are used to switch between FM, AM, and LW mode of the tuner.
LW button is not available in SR-14mkII.

Seek (< / >) buttons
These buttons are used to change the frequency.

Preset (P+ / P-) buttons
These buttons are used to change the preset station.

Mono button
This button is used to select the auto stereo mode or mono mode.

PTY button
Selects PTY function in RDS (Radio Data System) by this button.

Display button
Selects display mode function in RDS (Radio Data System) by this button.

Keypad (Tuner)

ten keypad (0,1 - 9)
These buttons are used to change the preset station or input frequency directly.

M (Memo) button
This button is used to enter the tuner's preset memory numbers and station names.

C (Clear) button
This button is used to cancel certain memory or programming operations.

F/P buttons
This button is to select the display for frequency or preset channel .

PS (Preset Scan) button
This button is used to start a scan automatically through the stations preset into the receiver's memory.

OPERATION OF REMOTE CONTROL UNIT

1. Remote control

The distance between the transmitter of the remote control unit and the IR SENSOR of the SR-14mkII should be less than about 15 feet. If the transmitter is pointed to a direction other than the IR SENSOR or if there is an obstacle between them, remote control may not be possible.

Remote-controllable range

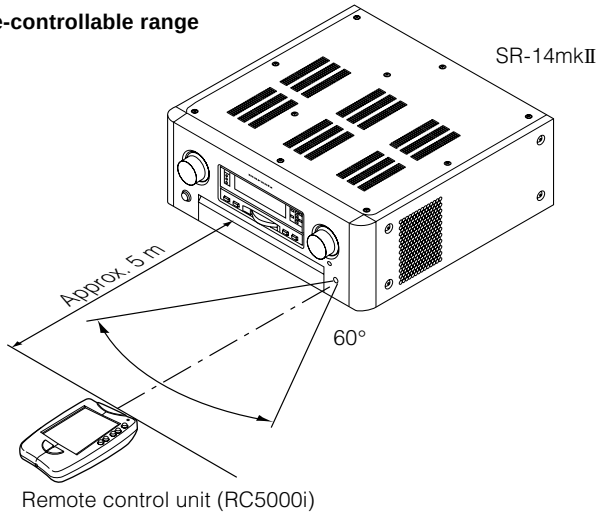

2. Receiving the remote control codes

The RC5000i can learn most of the remote control codes from various equipment, it learns the full word length of the code it is receiving.
Due to the sensitivity of the receiving LED the RC5000i may also "learn" noise from fluorescent lights, etc. which can quickly fill up the memory of the RC5000i.
In order to maximize the memory capacity of the RC5000i please pay close attention to the following:

(1) Aim the transmitting remote control at a direct line of sight to the RC5000i remote receiver eye.

(2) Keep 2 inches between transmitting remote and the RC5000i receiving eye.

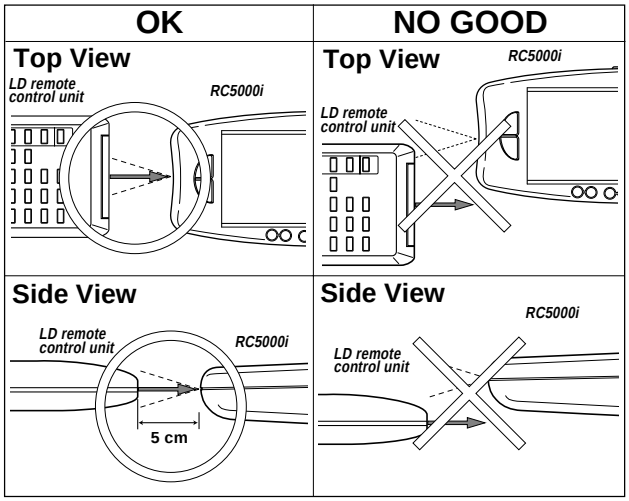

SETUP

After all components are connected, initial setup must be performed.

ON SCREEN DISPLAY MENU SYSTEM

The SR-14mkII incorporates an on-screen menu system, which makes various operations possible by using the cursor (**<**, **>**, **^**, **v**) and **ok** buttons on the "SETUP" screen in the remote handset.
The settings made with these buttons are also shown in the on-screen display.

MAIN MENU

```
   OSD MAIN MENU

 SURROUND MODE
 MULTI ROOM SETUP
 SYSTEM SETUP
 SPKRS SETUP
 LEVELS SETUP
 BACK GROUND: COLOR-1

                    EXIT
```

SURROUND MODE

```
   SURROUND MODE

SOURCE DIRECT  : OFF
SURR-MODE:  THX SUR EX
NIGHT MODE     : OFF
LFE LEVEL      : 0dB



RETURN             EXIT
```

SYSTEM SETUP 1/2

```
   SYSTEM SETUP 1/2
 VCR1 OUT   : SOURCE
 TAPE OUT   : SOURCE
 DIG. OUT   : SOURCE
 TV-AUTO    : DISABLE
 OSD INFO   : ENABLE
 S.P.C.     : DISABLE
 6CH INPUT  : OFF
 DIGITAL-6  : RF
RETURN   NEXT      EXIT
```

SPKRS SETUP 1/2

```
   SPKRS SETUP 1/2
SETUP       : UNLOCKED
FRONT L/R   : SMALL/THX
SUBWOOFER   : YES  /THX
SUB-W OUT   : THX
CENTER      : SMALL/THX
SURR. L/R   : SMALL/THX
SURR.BACK   : 2CH  /THX
SURR.B L/R  : SMALL/THX
         NEXT
```

MULTI ROOM SETUP

```
   MULTI ROOM SETUP
MULTI ROOM : OFF
VIDEO      : DVD
AUDIO      : DVD
VOLUME LEVEL :VARIABLE
             :  -90dB
SLEEP TIMER  :  OFF
---MAIN-ROOM STATUS---
VIDEO:DVD  AUDIO:DVD
RETURN             EXIT
```

SYSTEM SETUP 2/2

```
   SYSTEM SETUP 2/2
 CD     :   DIGITAL 4
 TAPE   :   ANALOG
 CD-R   :   DIGITAL 1
 TV     :   ANALOG
 LD     :   ANALOG
 DVD    :   DIGITAL 5
 VCR1   :   ANALOG
 DSS    :   DIGITAL 2
RETURN             EXIT
```

SPKRS SETUP 2/2

```
   SPKRS SETUP 2/2
    UNIT  :  ft
L          C          R
10         10    SW   10
               10
SL                    SR
10   SBL   SB   SBR  10
       10    10   10
RETURN  ENTER      EXIT
```

LEVEL SETUP 1/2

```
   LEVELS SETUP 1/2
  TEST MODE : MANUAL
  TEST:OFF
L          C          R
0          0     SW   0
               0
SL                    SR
0    SBL   SB   SBR   0
       0     0    0
NEXT
```

LEVEL SETUP 2/2

```
   LEVELS SETUP 2/2
   BASS PEAK LEVEL

 TEST SIGNAL : STOP
 VOLUME      : +18dB
 --------------------

        ENTER

RETURN             EXIT
```

ENGLISH

OSD MENU SYSTEM

To view the on-screen displays, make certain you have made a connection from the Monitor Out jack on the rear panel to the composite or S-Video input of your TV or projector.
In order to view the SR-14mkII's displays, the correct video source must be selected on the video display.

MAIN MENU

```
   OSD MAIN MENU

SURROUND MODE
MULTI ROOM SETUP
SYSTEM SETUP
SPKRS SETUP
LEVELS SETUP
BACK GROUND: COLOR-1

                    EXIT
```

1. Select the "Setup" page on the Remote control.
2. Press any one of the cursor buttons (**<** , **>**, **^**, **v** and **ok** buttons) to display the "MAIN MENU" of the on-screen display menu. There are six items inthe MAIN MENU.
3. Select a desired item with **^** or **v** button, and press the **ok** button to select. The display will change to menu for each item.
4. If you deseire to change a back ground color of this menu system, move cursor to BACK GROUND and using the **<** or **>** buttons.
5. If you desire to exit from this menu system, move the cursor to EXIT and press the **ok** button.

SPEAKERS SETUP AND LEVELS SETUP

SPEAKERS SETUP

Speakers size

The first few adjustments tell the SR-14mkII which type of speakers are in use. This is important as it adjusts the settings that determine which speakers receive low frequency (bass) information.
If you use full THX speaker systems which are approved by LUCASFILM LTD, set to the **SMALL/THX** position for front L/R ch., center ch. , surr. L/R ch., surr.back ch, and then select subwoofer =YES.
In turn, these settings will determine which speakers receive low frequency (bass) information.
For the purpose of establishing proper bass reproduction, use the LARGE settings if the speaker being used at any position is a traditional full-range loudspeaker that is capable of reproducing sound below 80 Hz.
Use the SMALL setting for smaller, frequency-limited satellite speakers that are not able to reproduce sounds below 80Hz. Note that when "small" speakers are used, a subwoofer is required to reproduce low frequency sounds.
Low frequency sounds from every channel in your system can be fed to a single subwoofer, since low frequency sounds are non-directional and not location sensitive. The SR-14mkII will automatically send low frequency signals from any channel set to "SMALL" to the Low Frequency Effects (Subwoofer) channel.
Remember that the "large" and "small" descriptions do not refer to the actual physical size of the speakers, but to their ability to reproduce low frequency sounds.
If you are in doubt as to which category describes your speakers, consult the specifications in the speakers' owner's manual, or ask your dealer.

SPEAKER TYPE AND POSITIONING FOR THX SURROUND EX

Type

THX suggests the use of pair of dipolar speakers for the Sb channels but a pair of monopole type speaker may also be used.

Positioning

It has been found that an angle of 150° from the Front Center speaker is a good starting point for establishing the location of Sbl and Sbr speakers. This is suggested from AES preprint #4860. The optimum position for Surround Back speakers is somewhat room dependent.
The Surround Back channel should be enveloping but not lost in the sound of the side speakers. Most dipoles have an arrow on them to indicate their orientation towards the screen. So for the side dipole, the arrows point forward. For the back dipoles, the arrows should point towards each other to achieve the correct acoustical phasing in the room:

Diagonal lines from speaker indicate dipole.

Dashed diagonal lines indicate dipole or monopole.

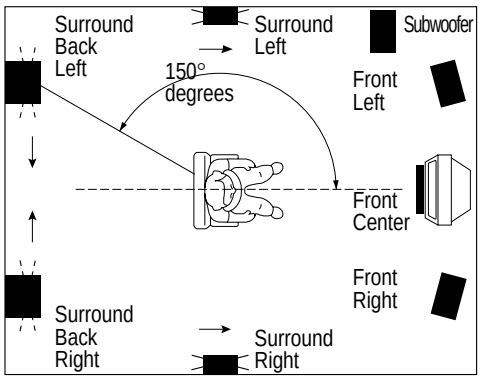

SPKRS SETUP 1/2 (SPEAKER SIZE)

```
    SPKRS SETUP 1/2
SETUP       : UNLOCKED
FRONT L/R   : SMALL/THX
SUBWOOFER   : YES  /THX
SUB-W OUT   : THX
CENTER      : SMALL/THX
SURR. L/R   : SMALL/THX
SURR.BACK   : 2CH  /THX
SURR.B L/R  : SMALL/THX
          NEXT
```

SETUP: Select "LOCK" with **<** or **>** button in order to lock the contents of the SPKRS SET UP & LEVELS SETUP MENUS. Then, when the contents of the these setup menus needs to be changed, select "UNLOCK" with **<** or **>** button.

FRONT L/R : Select the size of front L/R speakers , **"SMALL/THX"** or **"LARGE"** with **<** or **>** button.

SUBWOOFER : Select **"YES"** if a subwoofer is connected to your system, select **"NO"** subwoofer is NOT connected to your system.

SUB-W OUT : **"THX"** position is required, but If you desire an additional front L/R mixed subwoofer output in the STEREO mode, select **"L/R MIX"** with **<** or **>** button. This setup is available when FRONT L/R is set **"LARGE".** Notes that SURR BACK will be set **"NONE"**.

CENTER : Select the size of center speaker **"SMALL/THX"** , **"LARGE",** with **<** or **>** button. Select **"NONE"** , if a center speaker is NOT connected to your system.

SURR. L/R : Select the size of surround L/R speakers **"SMALL/THX"** , **"LARGE",** with **<** or **>** button. Select **"NONE"**, if surround speakers are NOT connected to your system.

SURR. BACK : Select the number of surround back channels, "2ch/THX", "1ch" or "NONE", with **<** or **>** button.
The THX Surround EX system requires two speakers for surround back channels.
But if you have only one speaker for the surround back channel, select "1CH".
(**Note:** If 1CH is selected, the signal of surround back will go out from pre output of surround back L ch only. In that case, connect your external amplifier to this output terminal.)
Select "NONE", if a surround back speaker is NOT connected to your system.
(**Note:** If the surround back speaker is selected **"NONE"**, THX Surround EX mode is not available.)

SURR. B L/R : Select the size of the surround back speaker(s) **"SMALL/THX"**, **"LARGE",** with **<** or **>** button.
If a surround back speaker(s) is connected to your system.

NEXT : Move cursor to here, and press **"ok"** button to go to **SPEAKERS SETUP 2/2**.

SPKRS SETUP 2/2 (SPEAKER DISTANCE)

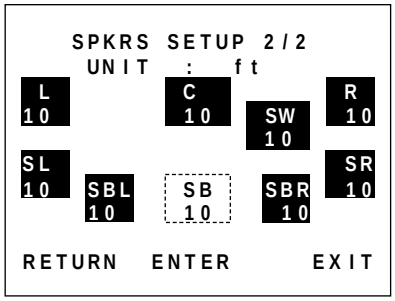

Speaker distance for time alignment
Use this parameter to specify the distance of each speaker's position from the listening position. The delay time is automatically calculated according to these distances.

UNITS: The units may be selected in **"ft"** or **"m"** with **<** or **>** button. If you select "ft" the setting parameter will change in 1 foot increments. If you select "m" it will change in 0.3 meters increments.

Begin by determining the ideal or most commonly used seating position in the room.
(There are several usefull books and special DVD and LD's available to guide you through proper home theater configuration. If you are unsure, have your Marantz dealer perform the installation for you. They are trained professionals familiar with even the most sophisticated custom installations. Marantz recommends the WWW.CEDIA.ORG website for further information about this).

Then provide the distance values from that point to each speaker during the speaker setup process.
Select the target speaker with **"ok"** button, and input parameter with **<** or **>** button.
After input for each speaker's distance has been finished ,move cursor to **ENTER** with **^** or **v** button and press the **ok** button.
If your input is out of the range of the SR-14mkII's processing, "incomplete channel" will flash.
In that case, input an acceptable parameter or improve the speaker placement.

The maximum distance a speaker may be placed is 30 feet (9 meters) from the listening position, which means you can setup your system in a room which is 60 feet long! If your home theater room is larger than this please consult a professional as it is sized more closely to a real movie theater!

The time aligment feature does not function in the STEREO, SOURCE-DIRECT, 5ch Stereo and 6 CHANNEL INPUT modes.

RETURN : If you desire to return the main menu , press the "**ok**" button on RETURN .
EXIT : If you desire to exit from OSD menu system, press the **"ok"** button on EXIT.

LEVELS SETUP 1/2 (TEST TONE GENERATOR)

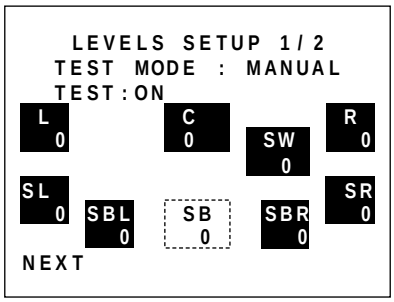

TEST MODE : Selects the mode for generating the test tone. If you select **AUTO** with **<** or **>** button, the test tone will be cycled through in a circular pattern which is Left → Center → Right → Surround Right → Surround Back Right → Surround Back Left → Surround Left → Subwoofer → Left → ...in increments of 3 seconds for each channel.
If you select **MANUAL**, press the **ok** button to cycle through the test tone channels after the "TEST TONE ON".

TEST TONE: Press the **ok** button, ON is indicated and the test tone starts from the front left speaker.
Notes : Master volume level will be automatically set at the 0 dB position.

Level adjust : Adjust the level of the test tone for each channel with the **LVL+, LVL–** or, **<**, **>** buttons of the RC5000i. The current volume level is shown at the center of the display.

Notes:
- The setup level for each channel is memorized for reproduction in all surround mode.
- These levels are common for all surround modes, except 6CH-INPUT mode.
- In order to correctly set the output levels, use a hand-held Sound Pressure Level meter (SPL), set to C-Weighting and Slow averaging.
- A Radio Shack ® SPL meter (catalogue number 330 - 2055) works well.
- Using the internal channel noise generators, set each channel so that you read 75 dB SPL from each channel when seated at the listening position.

LEVELS SETUP 2/2 (BASS PEAK LEVEL LIMIT)

With Dolby Digital and DTS , not only the LFE (Low Frequency Effects), but also the bass of all channels can be heard from the Subwoofer or Large-speakers. This procedure prevents these speakers from becoming too loud and creating an unbalanced sound. Since the sound is output at a loud volume, perform this operation carefully.

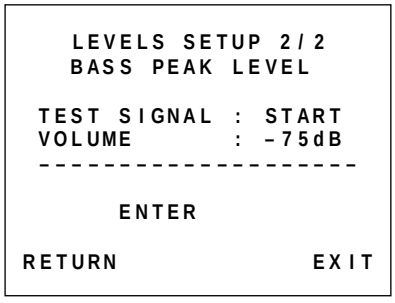

TEST SIGNAL: Press the **ok** button, START is indicated and it begins to generate a Bass test tone from the speaker which was designated "bass signal output" during setup.
There will be no audible sound yet because the Master volume is set to minimum automatically.
Press **v** button to move the cursor to VOLUME control.

VOLUME: Adjust the bass test tone output level up until the bass begins to distort or you reach the maximum level with the **VOL+**, **VOL–** or **</ >** button. Press **v** button to move the cursor to ENTER.

ENTER: Press the **ok** button, ENTER will blink and stop generating the Bass - test tone.
The Bass Peak Limit Level for your system has now been memorized.

Notes:
- Each time the subwoofer level is changed, perform the Bass Peak Level setup and correct the setting.
- The bass peak limiter is not effective in STEREO, SOURCE-DIRECT 5ch STEREO, and 6CHANNEL-INPUT mode.
- The selected value is displayed in the volume column before the test signal starts.

SYSTEM SETUP 1/2

```
   SYSTEM SETUP 1/2
 VCR1 OUT   : SOURCE
 TAPE OUT   : SOURCE
 DIG. OUT   : SOURCE
 TV-AUTO    : DISABLE
 OSD INFO   : ENABLE
 S.P.C.     : DISABLE
 6CH INPUT  : OFF
 DIGITAL-6  : RF
RETURN   NEXT     EXIT
```

VCR1 OUT : Select the video source from the VCR1 output with **<** or **>** button for video and audio dubbing to the VCR1 deck.
The source is switched in the following sequence.
SOURCE → TV → LD → DVD → DSS/VCR2 → AUX → SOURCE → .....
To determine each source, display the desired source and press the **^** or **v** button.

TAPE OUT : Select the audio source from the TAPE output with **<** or **>** button for audio dubbing to the tape deck. The source is switched in the following sequence.
SOURCE → TUNER → CD → CD-R/MD → SOURCE → ....
To determine each source, display the desired source and press the **<** or **>** button.

DIG. OUT : Select the digital source from the DIGITAL output with **<** or **>** button for digital dubbing to a CD-R recorder or MD deck.
The source is switched in the following sequence.
SOURCE → DIG.1 → DIG.2 → DIG.3 → DIG.4 → OFF→ SOURCE →
To determine each source, display the desired source and press the **^** or **v** button.

TV AUTO: This product is equipped with a TV-auto ON/OFF system, which automatically turns on or off the SR-14mkII power 1 second (for ON) and up to to 5 minutes (for OFF) after the TV video input signal is present or absent.
Switch the TV AUTO ON/OFF function to enable or disable with or button. To use this function, connect the TV video input to TV tuner's video output.

OSD Info : If you select enable, SR-14mkII will display the status of the feature (Volume up/down, input select, etc..) on the TV monitor.
But if you do not desire this information , select "DISABLE ".

S.P.C. : System Power Control : If you select "ENABLE", the SR-14mkII will output a power On/Off command for a CD player, MD player, or DVD player, from the remote output terminal.
If you have corresponding marantz products , you can turn them on/off simultaneously with SR-14mkII.

6CH. INPUT: 6 channel direct inputs on the SR-14mkII share the front channel of the desired source.
Select the desired source with **<** or **>** button.

DIGITAL 6 : The input of the Digital 6 terminal is commonly used with an AC-3 RF input or Coaxial Digital Input.
If Digital 6 is connected to the AC-3 RF output of a LD player, select " RF " with **<** or **>** button.
If you desire to connect this terminal to the digital output of a CD player, DVD player, SAT tuner or etc… . select " COAXIAL ".

SYSTEM SETUP 2/2 (ASSIGNABLE DIGITAL INPUT)

Six digital inputs can be assigned as the desired source.
Use this menu to set the SR-14mkII for connected equipment and type of connection.

```
   SYSTEM SETUP 2/2
 CD     :   ANALOG
 TAPE   :   ANALOG
 CD-R   :   ANALOG
 TV     :   ANALOG
 LD     :RF DIGITAL 1
 DVD    :   DIGITAL 4
 VCR1   :   ANALOG
 DSS    :   ANALOG
RETURN            EXIT
```

Example:
When the digital output of a DVD player is connected to Digital 4 (input jack) of the SR-14mkII and an AC-3 RF output and optical digital output from a LD player are connected to AC-3 RF(Dig.6) and Dig.1.

1. Move the cursor on the DVD with **^** or **v** button, and select DIGITAL4 with **<**, **>** button.
2. Move the cursor on the "LD" with **^** or **v** button, and select RF with **<** button, and select DIGITAL1 with **>** button.
   (Move the cursor with **^** or **v** button, input is determine.)

Notes

- The TUNER and AUX are fixed to the analog input, and cannot be selected for any digital input.
  The RF input is available for LD , and can be linked with Digital 1,2,3 ,4 or 5.
  If the RF input is linked with any Digital input, once the RF signal is not supplied, the SR-14mkII will switch from the RF input to the digital input automatically.
- If you connect an LD player, you should connect not only the RF output (if it has one) but also the Digital output.
  Laser Discs which are not encoded with Dolby Digital will then send the sound through the digital output (PCM audio). If the disc you are playing is old and doesn't have a digital soundtrack, you must connect the L/R analog outputs on the laser disc player to the laser disc analog inputs on the SR-14mkII.
- When a DTS-LD or DTS-CD is playing, this setup is not available. This is to avoid noise being generated from the analog input.
  In this case, the DTS audio must be played through the player's digital output to the digital input on the SR-14mkII. This is because the DTS soundtracks replace the standard PCM soundtracks on DTS discs.
- The SR-14mkII does not switch from digital input to analog input or vice versa automatically.
  In case both digital and analog inputs are connected to the SR-14mkII,if you desire to switch to analog input temporarily, you can do so by pressing the **A/D** button.
- If you select "Digital-6: COAXIAL" in Setup 1/2. RF is not available in this page.

SURROUND MODE

```
    SURROUND MODE

SOURCE DIRECT  : OFF
SURR-MODE:  DTS-CINEMA
NIGHT MODE     : ON
LFE LEVEL      :-10dB



RETURN              EXIT
```

SOURCE DIRECT : Switch the source direct ON or OFF with **<** or **>** button.
In this mode, SR-14mkII bypasses the digital processing and crossover for the main speakers (front left and right will be full range and the subwoofer will be ON)
Note: Source Direct mode will be off if Surround mode is changed.

SURR-MODE : Select the surround mode with **<** or **>** button.
Surround mode will change by scrolling as folow.
AUTO → THX5.1(THX4.0) → THX Sur EX → DOLBY D(DOLBY PL) → DTS-CINEMA → DTS-MUSIC → HALL → MATRIX → MOVIE → 5CH STEREO → STEREO → MONO →

NIGHT MODE : Switch the NIGHT MODE ON or OFF with **<** or **>** button.
Selecting the Night Mode ON is effective in Dolby Digital only, and it compresses the dynamic range.
This softens loud passages such as sudden explosions, to help prevent disturbing others late at night.

LFE LEVEL : Select the output level of the LFE signal included in the Dolby Digital signal or the DTS signal.
Select 0dB, -10 dB or OFF with **<** or **>** button.
The level is ordinarily set to 0 dB except DTS-Music mode. In the DTS-Music mode, default level is set to -10 dB.

MULTI ROOM SETUP

```
   MULTI ROOM SETUP
MULTI ROOM : ON
VIDEO      : VCR1
AUDIO      : FM 102.00
VOLUME LEVEL :VARIABLE
             :  -75dB
SLEEP TIMER  :  90 min
---MAIN-ROOM STATUS---
VIDEO:VCR1 AUDIO:VCR1
RETURN             EXIT
```

MULTI ROOM : To switch on the Multi-room output.

VIDEO : Select the video source of the Multi-room output with **<** or **>** button.

AUDIO : Select the audio source of the Multi-room output with **<** or **>** button.

VOLUME LEVEL : Select whether the Multi-room output level is variable or fixed with **<** or **>** button and move cursor to position for level with **v** button and adjust the Multi-room output level with **<** or **>** button.

SLEEP TIMER : SLEEP timer function for multi room is available , set the time with **<** or **>** button.

MAIN ROOM STATUS : Selected input source in the main room will be displayed.

Notes:

- If "VOLUME" is set to "FIXED", the multi-room output level cannot be adjusted from the second zone.
- You cannot transmit a digital signal using the multi-room function.
- Any source component that is desired to be operated in the second zone needs to have its analog inputs connected to the receiver.

ON SCREEN DISPLAY INFOMATION

The on-screen display, which can be activated by the Main unit or remote, appears on the TV screen to show the current setting status of the SR-14mkII.
These are available, when OSD INFO setup is selected "ENABLE".

1. GENERAL INFORMATION

When the **OSD** button is pressed, the current settings are displayed on the TV monitor.
Press the OSD button again, and this display will disappear.
This information will disappear automatically in about 10 seconds after the button is pressed.

```
VIDEO       : VCR1
AUDIO       : FM 102.00
DIGITAL IN  : DIG-1
DIGITAL OUT : DIG-6

SURR-MODE  : DTS-CINEMA
MULTIROOM  :ON

     MASTER VOLUME
 ------------------
```

VIDEO SOURCE: Displays the current video source being selected with the function selector
TV, LD, DVD, VCR1, DSS or **AUX**.

AUDIO SOURCE: Displays the current audio source being selected with the function selector
FM, AM, CD, TAPE, CD-R, TV, LD, DVD, VCR1, DSS, **AUX** or **6ch**.

DIGITAL INPUT: Displays the selected digital input .
DIG-1, DIG-2, DIG-3 , DIG-4 , DIG-5, RF or **DIG-6**.

DIGITAL OUTPUT: Displays the digital output that is being used for recording
SOURCE , DIG-1, DIG-2, DIG-3 , DIG-4 , DIG-5, DIG-6 or **OFF**.

SURROUND MODE: Displays the current surround mode
AUTO, DOLBY, THX 5.1, THX –EX , DTS-CINEMA, DTS-MUSIC, HALL, MATRIX, MOVIE , 5-STEREO , STEREO , MONO or **S-DIRECT**.

MULTI ROOM: Displays the current status of the Multi Room function.

MASTER VOLUME: Displays the current volume level.
The volume level moves higher to right of the display, and the pointer changes to " " at 0 dB.

Note:

- The On-Screen Display signals for the main room can be output from the TV MONI composite video (RCA) output and the TV MONI, S-Video output jacks.
- With some video equipment or software, the On-Screen Display characters may be distorted due to noise or tracking adjustment error.

ENGLISH

2. FUCTION SELECT & SURROUND MODE

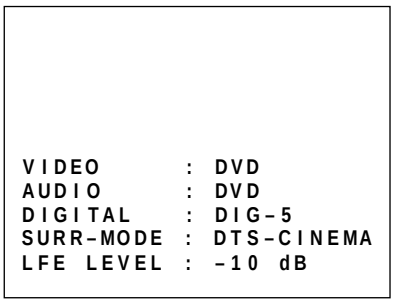

When a function or surround mode button is selected:

VIDEO: Displays the current video source. When DSS/TV, LD, DVD, VCR or AUX is selected with the function selector, both AUDIO and VIDEO shows the same name.
AUDIO: Displays the current analog audio input source.
DIGITAL: Displays the current digital input source.
SURR-MODE: Displays the current Surround mode as follows; **AUTO, DOLBY, THX 5.1, THX Sur. EX , DTS CINEMA, DTS MUSIC, HALL, MATRIX, MOVIE, 5-STEREO, STEREO, MONO, S-DIRECT,** or **6CH-INPUT**.

3. MASTER VOLUME CONTROL

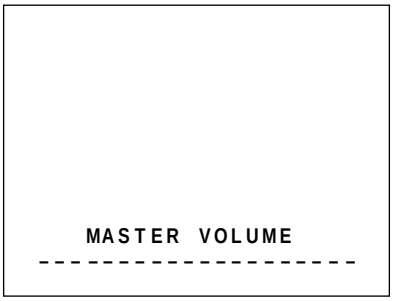

Displayed when the MASTER volume is varied or a button of the remote handset is pressed.
The box display indicates the 0 dB level with a solid box "□".

4. MUTE

When the **MUTE** button is pressed on the remote control, "MUTE" will be shown on screen. Pressing **MUTE** button again will clear the display, or adjust the volume.

5.SLEEP TIMER

When the **SLEEP** button is pressed, the setting on or off and the remaining time of the sleep timer function are displayed.
You can change the mode between on, off and the amount of time to elapse before the unit will shut itself off by cycling the sleep button.

BASIC OPERATION

LISTENING TO THE TUNER

Frequency scan step for AM is selectable. Default is 10 kHz step. If your country's standard is 9 kHz step, press "AM" button on the remote more than 6 seconds. Scan step will change.

Note:
- Memory for the tuner will clear by this setup.

MANUAL TUNING

1. To select the tuner as the source, turn the **INPUT SELECTOR** knob ⑮ on the front panel or press the **Tuner** button on the remote.
2. Press the **BAND** button ⑥ on the SR-14mkII or **AM/FM** buttons on page of Tune mode on the remote to select the desired frequency band.
3. Press the **AUTO TUNING** button ⑰ on the SR-14mkII to display the frequency.
4. Turn the **GYRO TUNING** knob ㉑ on SR-14mkII or press **< , >** button on page of Control mode on the remote.
5. If FM is selected, press the **FM MODE** button ⑦ on the front panel or the **Mono** buttons on page of Tune mode on the remote to select the desired audio mode.

AUTO TUNING (USING THE SR-14MKII)

Light up the "AUTO TUN" indicator by pressing the **AUTO TUNING** button ⑰ and turn the **GYRO TUNING** knob ㉑.

AUTO TUNING (USING THE REMOTE CONTROL UNIT)

The **< , >** button is pressed for more than 1 second to start Auto tuning function.

(FM) MODE Button Operation

When "AUTO" indicator is on in the display, FM stations which broadcast in stereo will be received in stereo and the "STEREO" indicator lights.
When "AUTO" indicator is off, all the FM stations will be received in monaural regardless of whether or not they are broadcasting in stereo.

PRESET TUNING

With this unit you can preset up to 50 FM/AM stations in any order. For each station, you can memorize the frequency and reception mode if desired.

1-a. Manual Presetting (Using the SR-14mkII)

1. Refer to the "**MANUAL TUNING**" or "**AUTO TUNING**" section above to tune in a desired station.
2. Press the **MEMO** button ⑧. "MEMO" indicator starts blinking on the display. While "MEMO" is still blinking (approx. 5 seconds), select the preset number by turning the **GYRO TUNING** knob ㉑, then press the **MEMO** button again.
3. When a number has been properly input, "MEMO" indicator stops blinking and goes out. The station is now stored in the specified preset memory location.

1-b. Manual Presetting (Using the remote unit)

1. Tune in a desired station.
2. Press the **M** button on page at Keypad mode.
3. Enter the desired preset number with **ten keypad** on page of Keypad mode.
   * When entering a single digit number (2, for example), either input "02" or just input "2" and wait for a few seconds.
   * If a number other than 1-50 is entered by mistake, that number flashes in the display to indicate that it is invalid and the display returns to the original frequency display.

2. Auto Presetting

This function automatically scans the LW, MW and FM band and enters all stations with proper signal strength into the memory.
This function is available only for SR-14mkII.

1. Select the FM band with the **BAND** button ⑥.
2. Tune in the lowest receivable frequency.
3. While pressing the **MEMO** button ⑧, turn the **GYRO TUNING** knob ㉑ to up. Auto memory starts at this point.
4. "MEMO " will blink on the display.
5. Each time the tuner finds a station, the scanning will pause and the station will be played for five seconds. During this time, the following operations are possible:
   1) The band can be changed using the **BAND** button ⑥.
   2) The mode can be changed using the **FM MODE** button ⑦.
6. If no button is pressed during this period, the current frequency is preset in location CH-2. If you wish to skip the current station, turn the **GYRO TUNING** knob ㉑ during this period, the current frequency is skipped and auto presetting continues.
7. Operation stops automatically when all 50 preset memory positions are filled or when auto scanning attains the highest end of all bands. To stop the auto preset function at anytime, press the **CL** (CLEAR) button ⑨.

3. Recalling a Preset Station

1. Press the **PRESET** button ⑱ to change the display to preset.
2. Select the desired preset station by turning **GYRO TUNING** knob ㉑ on the front panel or press **P+/P-** button on page of Control mode on the remote.

Note;

- Direct selection method using the ten keypad on the remote, select the desired preset station by entering one or two digits using the ten keypad on page of keypad mode on the remote.
- To return to the Manual Tuning mode, press the **AUTO TUNING** button ⑰.

4. Preset Scan Tuning (Using the remote control unit)

1. Press the **PS** on page of Keypad mode on the remote. "P-SCAN" indicator blinks in the display. (The preset station with the smallest preset number is recalled first. If no stations have been preset, CH "00" blinks in the display and the unit returns to the previous mode.)
2. Preset stations are recalled in sequence (CH-1 › CH-2, etc.) for 5 seconds each. Preset numbers that do not contain stations are skipped.
3. You can fast forward the preset stations by pressing the **P+** button continuously. When the desired preset station is received, cancel the preset scan operation by pressing the **P-** button or the **PS** button or **C** button.

5. Clearing Preset Stations

You can remove preset stations from memory using the following procedure.

1. Recall the preset number to be cleared with the method described in "Recalling" a preset station .
2. Press the **MEMO** button ⑧ on the front panel or **M** button on page of Keypad mode on the remote unit, "MEMO" blinks in the display for 5 seconds. While "MEMO" is still blinking, press the **CL** (CLEAR) button ⑨ on the front panel or **C** button on page of Keypad mode on the remote unit. "CLEAR" appears on the display to indicate that the specified preset number has been cleared.

STATION NAME PRESET

The station name preset function allows the name of each preset channel to be entered using alphanumeric characters. The Station Name button is valid only in the tuner mode. Before station name preset operation, store stations with the preset memory operation.

1. Press the **MEMO** button ⑧ on the front panel or **M** button on page of Keypad mode on the remote for more than 3 seconds.
2. The left most column of the station name indicator flashes, indicating the character entry ready status.

[Operation (Using the SR-14mkII)]

3. When the **GYRO TUNING** knob ㉒ is turned, alphabetic and numeric characters will be displayed in the following order:
   A → B → C ...Z → 1 → 2 → 3..... 0 → – → + → / → (Blank) → A
   UP →
   ← DOWN
4. After selecting the first character to be entered, press the **MEMO** button ⑧. The entry in this column is fixed and the next column starts to flash. Fill the next column and press the **MEMO** button ⑧ for more than 1 second to confirm the entry.

Note:

Unused columns should be filled by entering blanks.

[Operation (Using the remote unit)]

3. Enter the character using the ten keypad on page of Keypd mode. For example, to enter "A":
   1) Press the "1" button. "A" appears on the display column.
   2) Every time the 1 button is pressed, the displayed character changes in the order: A → B → C → 1 → A...
   Pressing buttons other than the "1" button cause different characters to be displayed in a similar way, so that other alphanumeric characters can be entered. To enter a blank or space, press the "9" button.
4. When the desired character is displayed, press the **M** button on page of Keypad mode to confirm the entry in this column and move to the next column. After having filled all of the 8 columns, press the **M** button, or more than 1 second to confirm the entry.

DIRECT FREQUENCY CALL

1. Press the **F/P** button on page of Keypad mode on the remote.
2. Front display will show "FREQ ----".
3. Input your desired frequency with Ten keypad button on the remote.

RDS OPERATION

Now in use in many countries, RDS (Radio Data System) is a description of the station's programming hidden space in the FM signal.
Your new receiver is equipped with RDS to assist in the selection of FM stations using station and network names, rather than broadcast frequencies. Additional RDS functions include the ability to search for programme types.

RADIO TEXT

Some RDS stations broadcast RADIOTEXT, which is additional information on the station and programme being broadcast.
RADIOTEXT information appears as 'running' text in the display. RADIOTEXT is transmitted character-by- character by the radio station. As a result of that it may take some time until the entire text has been completely received.

RDS DISPLAY

When a receiver is tuned to an FM station that is transmitting RDS data, the Front Panel Information Display will automatically show the station name or RDS TEXT in place of the typical display of the station's broadcast frequency.
To change the display, press the remote unit **Display** button at Control mode.

PROGRAMME TYPE (PTY) DISPLAY

The RDS system categorizes programmes according to their genre into different programme type (PTY) groups. To display the programme type information of the current station, press the remote unit **PTY** button at KYEPAD mode.

PTY AUTO SEARCH

Your receiver is equipped to automatically search for stations transmitting any of 29 different programme types. To search for a PTY, follow these steps:

1. Press the **PTY** button on the remote. The current station's PTY will be displayed, or the currently selected PTY group will be displayed in blinking if no station or RDS data is present.
2. To change to a new PTY type, turn the **GYRO TUNING** knob ㉑ until the desired PTY is shown in the display.
   To select a specific PTY type, use the ten key pad on the remote control to select the programme type corresponding to the numbered choices in the table on the following page.
3. Once the desired PTY group or type has been selected, press the **PTY** button on the remote control while the display blink (approx. 5 seconds). The PTY Auto search will start, and the tuner will pause at each station broadcasting RDS PTY information corresponding to the selected choice.
4. To advance to the next RDS station with the desired PTY, press the **PTY** button again within 5 seconds.

NUMBER	DISPLAY	PROGRAMME TYPE
1	POP	Pop Music
2	ROCK	Rock Music
3	MOR	M. O. R. Music
4	LIGHT	Light classical
5	CLASSIC	Serious classical
6	NEWS	News
7	AFFAIR	Current Affairs
8	INFO	Information
9	SPORT	Sport
10	EDUCATE	Education
11	DRAMA	Drama
12	CULTURE	Culture
13	SCIENCE	Science
14	OTHERS	Varied
15	OTHER	Other Music
16	WEATHER	Weather
17	FINANCE	Finance
18	CHILDREN	Children's programmes
19	SOCIAL	Social Affairs
20	RELIGION	Religion
21	PHONE IN	Phone In
22	TRAVEL	Travel
23	HOBBIES	Hobbies
24	JAZZ	Jazz Music
25	COUNTRY	Country Music
26	NATION	National Music
27	OLDIES	Oldies Music
28	FOLK	Folk Music
29	DOCUMENT	Documentary

PLAYBACK OPERATION

NORMAL PLAYBACK

1. Press the POWER ON button on the remote.
2. Turn the **INPUT SELECTOR** ⑮ on the front panel or press the **FUNCTION** buttons on page of Input mode on the remote unit to select an input source.
3. Press the **Surround mode** buttons ③ on the front panel or desired surround mode buttons page of Surround mode on the remote unit to select.
4. Adjust the volume level using the **VOLUME** knob ⑯ on the front panel or press the **VOLUME + / –** buttons on the remote. If necessary, adjust the tone using the **Bass** and **Treble** buttons on page of Tonal control mode on the remote unit.

LISTENING TO A DIFFERENT AUDIO SOURCE WHILE WATCHING A VIDEO SOURCE (Using the remote control unit)

1. Select one of the following video sources TV, LD, DVD, VCR1, DSS/VCR2 or AUX.
2. Next, select one of the following audio sources FM, AM, CD, TAPE, or CDR/MD.

OTHER FUNCTIONS

MULTI ROOM SELECTOR

The Multi Room Selector is a function which allows you to listen to the same or a different source in a room other than the room in which the SR-14mkII is located. To use this function, a multi room remote unit and remote control signal receiver available from your Marantz dealer are necessary. The operations possible with the multi room function are explained briefly below. For details, refer to the instruction manual supplied with the multi room remote control unit and receiver.

MULTI ROOM SELECTOR OPERATION

1. Press the **MULTI** button ⑲. The unit enters multi room mode and the display indicates "SELCT SOURCE" and flashes the "MULTI" indicator for approx. 10 seconds. In this time, you can select the input source by turning the **INPUT SELECTOR** knob ⑮.
2. Then, the display indicates "MULTI VOL" "VOLUME xx dB" for approx. 5 seconds. During this time, you can set the volume level for the multi room operation. This will only set the volume in the second room.

MULTI ROOM SELECTOR OPERATION (USING THE MULTI ROOM REMOTE CONTROL UNIT)

1. Press the **M.R. on** button on page of Input mode, the POWER ON button, or select the desired source on multi room remote control unit from the second room. Any of these operations will put the SR-14mkII into multi room mode and "MULTI" will light in the display.
2. Press the **VOLUME +** or **VOLUME –** button on the multi room remote control unit to set the desired sound volume.
3. In multi room mode, the multi room remote control unit can be used in the multi room to operate the following functions.
   You can select a tuner preset channel and tuning up or down, and direct frequency selection. And you can control the CD player LD player, DVD player and other source connected to the SR-14mkII.

Caution:

- Multi room mode can only be selected when the SR-14mkII **POWER** switch ① is turned on.
- If the main room is active (not standby mode), you cannot select a radio band except the band of the main room. For example; if the FM band is selected in the main room, you cannot select the AM band in the multi room.
- The operating procedure for this is the same as the Multi-room operations using the remote unit.
- If you operate from second room, SR-14mkII will output video signal with OSD information.

```
    MULTI ROOM SETUP

VIDEO          : DVD
AUDIO          : DVD
VOLUME LEVEL   :  -75 dB
               :VARIABLE
SLEEP TIMER    :  90 min
---MAIN-ROOM STATUS---
     VIDEO : LD
     AUDIO : LD
```

DIALOGUE NORMALIZATION MESSAGE

Dialogue Normalization (Dial Norm) is a feature of Dolby Digital.
When playing back software which has been encoded in Dolby Digital, sometimes you may see a brief message in the front panel display which will read "Dial Norm X dB" (X being a numeric value).
Dialogue Normalization serves to let you know if the source material has been recorded at a higher or lower level than usual. For example, if you see the following message: "Dial Norm + 4 dB" in the front panel display, to keep the overall output level constant just turn down the volume control by 4 dB. In other words, the source material that you are listening to has been recorded 4 dB louder than usual.
If you do not see a message or see "Dial Norm 0 dB" in the front panel display, then no adjustment of the volume control is necessary.

TV AUTO ON/OFF FUNCTION

This function allows the component connected to the TV IN jack to control the power (ON/OFF) to the SR-14mkII.

AUTO POWER ON

1. Be sure TV auto mode is on. (Refer page 18 : System Setup 1/2)
2. Connect your TV TUNER (etc) to the TV IN terminal.
   Be sure to connect the video input.
3. Turn OFF the power to the TV TUNER and the SR-14mkII.
4. Turn ON the TV TUNER and tune in a receivable station.
5. When the station is received, the SR-14mkII turns ON and TV is selected automatically.

AUTO POWER OFF

1. In the above situation, turn the TV TUNER OFF or select a channel that does not contain any broadcast.
2. The power to the SR-14mkII switches to STANDBY after approx. 5 minutes.

Note:

- AUTO POWER OFF is canceled if the **INPUT SELECTOR** knob ⑮ is set to a source other than TV. The function reactivates when TV is selected again.

Caution:

- Some TV broadcasts may cause the TV AUTO FUNCTION to turn ON. To set this function ON/OFF, refer to the SETUP MENU.

SETTING THE SLEEP TIMER (ONLY REMOTE CONTROL UNIT)

Set the sleep timer while the power is turned on.

1. Turn the power ON and press the **Sleep** button on page of Control mode.
   "SLEEP" blinks on the display.
2. Press the **Sleep** button the number of times to set the desired sleep time.
   Each press of the **Sleep** button changes the display in the following order:

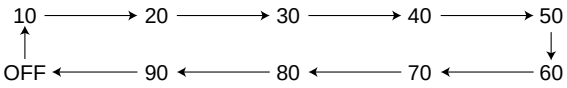

   "SLEEP" stops blinking and lights steadily.

* While the sleep timer is activated, the remaining time can be displayed for approx. 2 seconds by pressing the **Sleep** button.

* To cancel the sleep timer, press the **Sleep** button and then press the **C** button.

This operating procedure is same as the Multi room operations from second room.

SURROUND MODES

The SR-14mkII incorporates digital signal processors (DSP) which can reproduce various surround effects you experience in concert halls and movie theaters, etc. Nine Surround Modes, are provided to reproduce a variety of surround sound effects, according to the content of the source to be played.

AUTO	When this mode is selected, the receiver determines whether the digital input signal is Dolby Digital, PCM-audio or DTS. THX Surround EX will operate for any 5.1 channel source that has a Dolby Digital Surround EX auto trigger flag in the digital signal. **Note:** When a Dolby Digital or DTS signal is input, the number of channels for which the corresponding signal is encoded will be played. Inputting a Dolby Digital two channel signal with Dolby surround status automatically subjects that signal to Pro-Logic processing before play. HDCD and PCM 96 KHz source material can be played in this mode.
THX Cinema	THX Cinema surround mode applies additional processing to Dolby Digital, DTS, and Dolby Pro Logic multi-channel surround sources. The THX processing was developed by Lucasfilm Ltd. to recreated the sound of top-quality theater. Use the THX Cinema mode for all movies on disc, tape or broadcast. In this mode, THX Surround EX will not operate. **Note:** PCM-audio signals can be subjected to THX processing when the sampling frequency is 32 kHz, 44.1 kHz or 48 kHz. However output will be muted when 96 kHz PCM signal is input.
THX Surround EX	In a movie theater, film soundtracks that have been encoded with Dolby Digital surround EX technology are able to reproduce an extra channel which has been added during the mixing of the program. This channel, called Surround Back, places sounds behind the listener in addition to the currently available front left, front center, front right, surround right, surround left and subwoofer channels. This additional channel provides the opportunity for more detailed imaging behind the listener and brings more depth, spacious ambience and sound localization than ever before. THX Surround EX will operate for any 5.1 channel source whenever THX is active. This mode is not available in the system without surround back speaker(s).
□□ (DOLBY Digital, DOLBY Pro Logic)	This mode is used with source materials encoded in Dolby Digital and Dolby Surround. Dolby Pro Logic processing can be used on Dolby Surround encoded two channel source material (Dolby Digital two channels, PCM-audio and Analog stereo). This allows play of the four discrete channels (left, center, right and surround). **Note:** PCM-audio signals can be subjected to Pro Logic processing when the sampling frequency is 32 kHz, 44.1 kHz or 48 kHz. When a signal in another format is input, output will be muted.
DTS Cinema **DTS Music**	This mode is for DTS encoded source materials such as LASER DISC, CD, and DVD. In the DTS Music mode, the LFE signal is reduced by 10 dB. With DTS music material, you should select the DTS Music mode. When playing DTS movie discs select DTS cinema mode for proper reproduction of the LFE channel. The DTS mode cannot be used when an Analog input has been selected. When the signal in another digital format is input, output will be muted.
DSP SURROUND (Hall,Matrix,Movie)	These modes provide surround effect processing from each input source material. They will produce theater, concert hall and stadium like atmospheres. Select as your taste desires. **Note:** PCM-audio signals can be processed in this mode when sampling frequency is 32 kHz, 44.1 kHz or 48 kHz. The 96 kHz sampling frequency mutes output.
5ch STEREO	This mode is used to create a wider, deeper and more natural soundstage from two channel source material. This is done by feeding the left channel signal to both left front and left surround speaker and the right channel signal to both right front and right surround speaker. Additionally, the center and surround back channel reproduces a mix of the right and left channel.
STEREO	This mode bypasses all surround processing.
MONO	Stereo program sources (left and right channels)play normally when PCM-audio or analog stereo is input. With Dolby Digital and DTS sources, the 5.1 multi-channels are converted to two channel stereo. 96 KHz source material can be play back in stereo mode.
Source Direct	In the source direct mode, the tone control circuit and bass management configuration are bypassed for full range frequency response and the purist audio reproduction. HDCD and 96 KHz source material can be play back in this mode. **Notes:** Internal speaker size is setup to front L/R = Large, Center = Large, Surround L/R = Large and Subwoofer = yes automatically. Tone controls are also defeated.

Caution for DTS signal:

This signal can be played when the connected DVD-player, laser-disc player or CD-player is capable of DTS-digital output. For details, refer to the player's operation manual.

Depending on the player used, DTS play may produce noise. If that happens, set the Surround mode to DTS.

Playing a DTS-CD or DTS laser disc causes the player's analog output terminal to output noise. Before playing DTS sources, be sure to connect the player's digital output to SR-14's digital input. Be careful when connecting the output of these players to analog audio input.

Note that SR-14mkII has the following restrictive functions built in to reduce noise emission as much as possible.

If DTS is selected while in the Surround mode, digital input cannot be switched to analog input. When the analog input function has been selected, Surround mode cannot be switched to DTS.

While signals from DTS-laser disc or CD are playing in another Surround mode, you cannot switch to digital input or from digital input to analog input.

Caution for 96kHz PCM-audio signal:

This signal can be played when a DVD-player or DAT-player connected to SR-14mkII is capable of 96 kHz PCM output. For details, refer to the player's operation manual.

The signal can be played when STEREO or AUTO has been selected for the Surround mode.

Some DVD formatted discs featured copy protect. When using such disc, 96 kHz PCM signal is not output from the DVD player. For details, refer to the player's operation manual.

Caution for HDCD signal:

This signal can be played in "AUTO" and "S-Direct" mode. Depending on the CD-player, HDCD signal is not output correctly.

The relation between the selected surround mode and the input signal

The surround mode is selected with the surround mode buttons on SR-14mkII or the remote control unit. However, the sound you hear is subject to the relationship between the selected surround mode and input signal. That relationship is as follows;

Surround mode	Input signal	Output					FTD Indicator		
		L/R	SL/SR	SbL/SbR	C	SW	Encoded status	Surround Mode	CH status
AUTO	AC-3(5.1ch)	○	○	-	○	○	DD DIGITAL	AUTO : DOLBY D	L,C,R,SL,SR,LFE
	AC-3(2ch)	○	-	-	-	-	DD DIGITAL	AUTO : STEREO	L,R
	AC-3(2ch: Lt/Rt)	○	○	-	○	○	DD DIGITAL, DD SURROUND	AUTO : PRO LOGIC	L,R,S
	AC-3 (EX)	○	○	○	○	○	DD DIGITAL	AUTO : THX Sur EX	L,C,R,SL,S,SR,LFE
	96kHz PCM	○	-	-	-	○	PCM	AUTO : STEREO 96k	L,R
	PCM(audio)	○	-	-	-	○	PCM	AUTO : STEREO	L,R
	PCM(HDCD)	○	-	-	-	○	PCM, HDCD	AUTO : STEREO	L,R
	Analog	○	-	-	-	○	ANALOG	AUTO : STEREO	-
	DTS(5.1ch)	○	○	-	○	○	dts	AUTO : DTS Cinema	L,C,R,SL,SR,LFE
S-Direct	AC-3(5.1ch)	○	○	-	○	○	DD DIGITAL	SOURCE DIRECT	L,C,R,SL,SR,LFE
	AC-3(2ch)	○	-	-	-	-	DD DIGITAL	SOURCE DIRECT	L,R
	AC-3(2ch: Lt/Rt)	○	○	-	○	-	DD DIGITAL, DD SURROUND	SOURCE DIRECT	L,R,S
	AC-3 (EX)	○	○	-	○	○	DD DIGITAL	SOURCE DIRECT	L,C,R,SL,S,SR,LFE
	96kHz PCM	○	-	-	-	-	PCM	S-DIRECT 96k	L,R
	PCM(audio)	○	-	-	-	-	PCM	SOURCE DIRECT	L,R
	PCM(HDCD)	○	-	-	-	-	PCM,HDCD	SOURCE DIRECT	L,R
	Analog	○	-	-	-	-	ANALOG	SOURCE DIRECT	-
	DTS(5.1ch)	○	○	-	○	○	dts	SOURCE DIRECT	L,C,R,SL,SR,LFE
THX	AC-3(5.1ch)	○	○	-	○	○	DD DIGITAL	THX 5.1	L,C,R,SL,SR,LFE
	AC-3(2ch)	○	○	-	○	○	DD DIGITAL	THX 4.0	L,R
	AC-3(2ch: Lt/Rt)	○	○	-	○	○	DD DIGITAL, DD SURROUND	THX 4.0	L,R,S
	AC-3 (EX)	○	○	-	○	○	DD DIGITAL	THX 5.1	L,C,R,SL,S,SR,LFE
	96kHz PCM	-	-	-	-	-	(PCM)	THX 4.0 (96kHz)	L,R
	PCM(audio)	○	○	-	○	○	PCM	THX 4.0	L,R
	PCM(HDCD)	○	○	-	○	○	PCM	THX 4.0	L,R
	Analog	○	○	-	○	○	ANALOG	THX 4.0	-
	DTS(5.1ch)	○	○	-	○	○	dts	THX 5.1	L,C,R,SL,SR,LFE
THX EX	AC-3(5.1ch)	○	○	○	○	○	DD DIGITAL	THX Sur EX	L,C,R,SL,SR,LFE
	AC-3(2ch)	○	○	-	○	○	DD DIGITAL	THX 4.0	L,R
	AC-3(2ch: Lt/Rt)	○	○	-	○	○	DD DIGITAL, DD SURROUND	THX 4.0	L,R,S
	AC-3 (EX)	○	○	○	○	○	DD DIGITAL	THX Sur EX	L,C,R,SL,S,SR,LFE
	96kHz PCM	-	-	-	-	-	(PCM)	THX 4.0 (96kHz)	L,R
	PCM(audio)	○	○	-	○	○	PCM	THX 4.0	L,R
	PCM(HDCD)	○	○	-	○	○	PCM	THX 4.0	L,R
	Analog	○	○	-	○	○	ANALOG	THX 4.0	-
	DTS(5.1ch)	○	○	○	○	○	dts	THX Sur EX	L,C,R,SL,SR,LFE
DD	AC-3(5.1ch)	○	○	-	○	○	DD DIGITAL	DOLBY D	L,C,R,SL,SR,LFE
	AC-3(2ch)	○	○	-	○	○	DD DIGITAL	DOLBY Pro Logic	L,R
	AC-3(2ch: Lt/Rt)	○	○	-	○	○	DD DIGITAL, DD SURROUND	DOLBY Pro Logic	L,R,S
	AC-3 (EX)	○	○	○	○	○	DD DIGITAL	DOLBY D EX	L,C,R,SL,S,SR,LFE
	96kHz PCM	-	-	-	-	-	(PCM)	DOLBY D (96kHz)	L,R
	PCM(audio)	○	○	-	○	○	PCM	DOLBY Pro Logic	L,R
	PCM(HDCD)	○	○	-	○	○	PCM	DOLBY Pro Logic	L,R
	Analog	○	○	-	○	○	ANALOG	DOLBY Pro Logic	-
	DTS(5.1ch)	-	-	-	-	-	(dts)	DOLBY D	-
DTS Cinema	AC-3(5.1ch)	-	-	-	-	-	(DD DIGITAL)	DTS Cinema (no data)	-
	AC-3(2ch)	-	-	-	-	-	(DD DIGITAL)	DTS Cinema (no data)	-
	AC-3(2ch: Lt/Rt)	-	-	-	-	-	(DD DIGITAL)	DTS Cinema (no data)	-
	AC-3 (EX)	-	-	-	-	-	(DD DIGITAL)	DTS Cinema (no data)	-
	96kHz PCM	-	-	-	-	-	(PCM)	DTS Cinema (96kHz)	-
	PCM(audio)	-	-	-	-	-	(PCM)	DTS Cinema (no data)	-
	PCM(HDCD)	-	-	-	-	-	(PCM)	DTS Cinema (no data)	-
	Analog	-	-	-	-	-	ANALOG	-	-
	DTS(5.1ch)	○	○	-	○	○	dts	DTS Cinema	L,C,R,SL,SR,LFE
DTS music	AC-3(5.1ch)	-	-	-	-	-	(DD DIGITAL)	DTS Music (no data)	-
	AC-3(2ch)	-	-	-	-	-	(DD DIGITAL)	DTS Music (no data)	-
	AC-3(2ch: Lt/Rt)	-	-	-	-	-	(DD DIGITAL)	DTS Music (no data)	-
	AC-3 (EX)	-	-	-	-	-	(DD DIGITAL)	DTS Music (no data)	-
	96kHz PCM	-	-	-	-	-	(PCM)	DTS Music (96kHz)	-
	PCM(audio)	-	-	-	-	-	(PCM)	DTS Music (no data)	-
	PCM(HDCD)	-	-	-	-	-	(PCM)	DTS Music (no data)	-
	Analog	-	-	-	-	-	ANALOG	-	-
	DTS(5.1ch)	○	○	-	○	○	dts	DTS Music	L,C,R,SL,SR,LFE
DSP (Hall,Matrix Movie,etc)	AC-3(5.1ch)	○	○	-	○	○	DD DIGITAL	Movie or Hall or Matrix	L,C,R,SL,SR,LFE
	AC-3(2ch)	○	○	-	○	○	DD DIGITAL	Movie or Hall or Matrix	L,R
	AC-3(2ch: Lt/Rt)	○	○	-	○	○	DD DIGITAL, DD SURROUND	Movie or Hall or Matrix	L,R,S
	AC-3 (EX)	○	○	-	○	○	DD DIGITAL	Movie or Hall or Matrix	L,C,R,SL,S,SR,LFE
	96kHz PCM	-	-	-	-	-	(PCM)	Movie or Hall or Matrix (96kHz)	-
	PCM(audio)	○	○	-	○	○	PCM	Movie or Hall or Matrix,	L,R
	PCM(HDCD)	○	○	-	○	○	PCM	Movie or Hall or Matrix,	L,R
	Analog	○	○	-	○	○	ANALOG	Movie or Hall or Matrix	-
	DTS(5.1ch)	○	○	-	○	○	dts	Movie or Hall or Matrix,	L,C,R,SL,SR,LFE
	DTS(ES)	○	○	-	○	○	dts	Movie or Hall or Matrix,	L,C,R,SL,S,SR,LFE

Surround mode	Input signal	Output					FTD Indicator		
		L/R	SL/SR	SbL/SbR	C	SW	Encoded status	Surround Mode	CH status
5ch Stereo	AC-3(5.1ch)	○	○	-	○	○	DIGITAL	5ch STEREO	L,C,R,SL,SR,LFE
	AC-3(2ch)	○	○	○	○	○	DIGITAL	5ch STEREO	L,R
	AC-3(2ch: Lt/Rt)	○	○	○	○	○	DIGITAL, SURROUND	5ch STEREO	L,R,S
	AC-3 (EX)	○	○	-	○	○	DIGITAL	5ch STEREO	L,C,R,SL,S,SR,LFE
	96kHz PCM	-	-	-	-	-	PCM	5ch STEREO (96k)	-
	PCM(audio)	○	○	○	○	○	PCM	5ch STEREO	L,R
	PCM(HDCD)	○	○	○	○	○	PCM	5ch STEREO	L,R
	Analog	○	○	○	○	○	ANALOG	5ch STEREO	-
	DTS(5.1ch)	○	○	-	○	○	dts	5ch STEREO	L,C,R,SL,SR,LFE
STEREO	AC-3(5.1ch)	○	-	-	-	○	DIGITAL	STEREO	L,C,R,SL,SR,LFE
	AC-3(2ch)	○	-	-	-	○	DIGITAL	STEREO	L,R
	AC-3(2ch: Lt/Rt)	○	-	-	-	○	DIGITAL, SURROUND	STEREO	L,R,S
	AC-3 (EX)	○	-	-	-	○	DIGITAL	STEREO	L,C,R,SL,S,SR,LFE
	96kHz PCM	○	-	-	-	○	PCM	STEREO 96k	L,R
	PCM(audio)	○	-	-	-	○	PCM	STEREO	L,R
	PCM(HDCD)	○	-	-	-	○	PCM,	STEREO	L,R
	Analog	○	-	-	-	○	ANALOG	STEREO	-
	DTS(5.1ch)	○	-	-	-	○	dts	STEREO	L,C,R,SL,SR,LFE
MONO	AC-3(5.1ch)	-	-	-	○	○	DIGITAL	MONO	L,C,R,SL,SR,LFE
	AC-3(2ch)	-	-	-	○	○	DIGITAL	MONO	L,R
	AC-3(2ch: Lt/Rt)	-	-	-	○	○	DIGITAL, SURROUND	MONO	L,R,S
	AC-3 (EX)	-	-	-	○	○	DIGITAL	MONO	L,C,R,SL,S,SR,LFE
	96kHz PCM	-	-	-	-	-	(PCM)	MONO (96k)	-
	PCM(audio)	-	-	-	○	○	PCM	MONO	L,R
	PCM(HDCD)	-	-	-	○	○	PCM,	MONO	L,R
	Analog	-	-	-	○	○	ANALOG	MONO	-
	DTS(5.1ch)	-	-	-	○	○	dts	MONO	L,C,R,SL,SR,LFE
6ch Input		○	○	-	○	○	-	6ch Input	-

Note: AC-3(2ch:Lt/Rt)signals have Dolby Surround flag.
SPKRS setup is full THX system (8ch Speakers).

L/R : Front speaker
SL/SR : Surround speaker
SbL/SbR : Surround back speaker
C : Center speaker
SW : Sub woofer speaker

( ): The indicator blinks

TROUBLESHOOTING

In case of trouble, check the following before calling for service:

1. Are the connections made properly ?
2. Are you operating the unit properly following user's guide ?
3. Are the power amplifiers and speaker working properly ?

If the unit does not operate properly, check items shown in the following table.
If your trouble cannot be recovered with the remedy actions listed in the following table, malfunction of the internal circuitry is suspected; immediately unplug the power cable and contact your dealer, nearest Marantz distributor or the Marantz Service Center in your country.

SYMPTOM	CAUSE	REMEDY
SR-14mkII cannot be turned up.	The power plug is not connected.	Connect the power plug to the outlet.
No sound and picture are output even when power is on.	Mute is on. The input cable is not connected correctly. The master volume control is turned all the way down. The function selector position is wrong.	Cancel mute using the remote control unit. See the connection diagram and connect the cables correctly. Adjust the master volume. Select correct position.
Speaker not outputting any sound.	The headphones are connected to the headphone jack.	Disconnect the headphones. (Speakers will not output sound when headphones are connected.)
Sound and pictures from other than equipment selected with the function selector.	Input cable connected incorrectly.	Connect the cable correctly by referring to the connection diagram.
Sound from the wrong channel is output from the speaker.	Speaker cable connected incorrectly.	Connect the cable correctly by referring to the connection diagram.
No sound is output from the center speaker.	The center speaker cable connection is incomplete. STEREO has been selected for Surround mode. Center = NONE has been selected in SETUP mode.	Connect the cable correctly. When STEREO is selected for Surround mode, no sound will be output from the center speaker. Set another Surround mode. Make the correct setting.
No sound is output from the surround speaker.	The surround speaker cable connection is incomplete. STEREO has been selected for Surround mode. Surround = NONE has been selected in SETUP mode.	Connect the cable correctly. When STEREO has been selected for Surround mode, no sound will be output from the surround speaker. Set another Surround mode. Make the correct setting.
No output to Sub Woofer Out.	Sub-woofer = NONE has been selected in SETUP mode.	Select Sub-woofer = YES.
Surround mode cannot be changed.	The headphones are connected to the jack.	Disconnect the headphones. (When headphones are connected, Surround mode will be fixed to STEREO.)
Noise is produced during DTS-encoded CD or laser disc play.	Analog has been selected for input.	Be sure to perform digital connection, select digital input, then play.
DTS sources cannot be played.	Surround mode is set to DOLBY. The DVD or LD player is not DTS digital out capable.	Select other mode. Use a player which responds to DTS-digital out.
Player skips during play of a DTS source and produces noise.	Data error occurred during player skip.	Set Surround mode to DTS-cinema or DTS-music..
A 96kHz PCM signal cannot be played.	The disc player is not 96kHz PCM digital out capable. Surround mode is set to other than STEREO and AUTO.	Use a player that responds to 96kHz PCM digital out. Set Surround mode to STEREO or AUTO.
A normal PCM signal (CD or laser disc) cannot be played.	Surround mode is set to DTS-cinema or DTS-music.	Select other mode.
A Dolby Digital signal cannot be played.	Surround mode is set to DTS-cinema or DTS-music.	Select other mode.
A specific channel does not produce output.	Nothing recorded on source.	Check the encoded channel on the source side.
FM or AM reception fails.	Antenna connection is incomplete.	Correctly connect the indoor FM and AM antennas to FM and AM antenna outlets.
Noise is heard during AM reception.	Reception is affected by other electrical fields.	Try changing location where the AM indoor antenna is set up.
Noise is heard during FM reception.	The radio waves from the broadcasting station are weak.	Install an FM outdoor antenna or use cable TV/FM.
Cannot get programmed station when the PRESET button is pressed.	Preset data has been erased.	Disconnecting power plug for long periods of time will erase preset data. If that happens, input the preset data again.
Nothing appears on the remote commander display.	Batteries are consumed.	Replace all the batteries with new ones.
Control with the remote control unit fails.	Batteries are consumed.. Remote controller's function-key setting is wrong. The distance between this SR-14mkII and the remote commander is too far. Something is blocking SR-14mkII and the remote commander.	Replace all the batteries with new ones.. Select different position from which equipment will be controlled. Move closer to this SR-14mkII. Remove offending object.
No sound is output from the surround back speaker.	The surround speaker cable connection is incomplete. STEREO has been selected for Surround mode. Surr. Back = NONE has been selected in SETUP mode. Surround mode is not THX surround EX.	Connect the cable correctly. Surround back channel is active in THX surround EX mode, in other Surround mode, no sound will be output from the surround speaker. Set THX Surround EX mode.
Can not decode HDCD.	Input signal does not support HDCD. Surround mode is not AUTO, or Source Direct.	Play HDCD CD . Set surround mode AUTO or Source Direct.

GENERAL MALFUNCTION

If the equipment malfunctions, this may be because an electrostatic discharge or AC line interference has corrupted the information in the equipment memory circuits. Therefore:

- disconnect the plug from the AC line supply
- after waiting at least three minutes, reconnect the plug to the AC line supply
- re-attempt to operate the equipment

ERROR MESSAGES

When the display indicates some error messages (e.g. ERROR **), unplug the power cable immediately. Contact your dealer, nearest Marantz distributor or the Marantz service center in your area.

Memory backup

- In case a power outage occurs or the power cord is accidentally unplugged, the SR-14mkII is equipped with a backup function to prevent memory data such as the preset memory from being erased.
  The memory functions are backed up for up to about one week.

NOTE:

First of all keep SR-14mkII Standby or Powered-on more than six hours, to sufficient time for memory back up.

HOW TO RESET THE UNIT

Should the operation or display seem to be abnormal, reset the unit with the following procedure.
The SR-14mkII is turned on, press and hold the **CL** (CLEAR) ⑨ and **DISPLAY OFF** ⑳ buttons simultaneously for 3 seconds or more.
Remember that the procedure will reset the settings of the function selector, Surround mode, delay time, TUNER PRESET etc., to their initial settings.

TECHNICAL SPECIFICATIONS

FM TUNER SECTION

Frequency Range	87.5 - 108.0 MHz
Usable Sensitivity	IHF 1.8 µV/16.4 dBf
Signal to Noise Ratio	Mono/Stereo 76/72 dB
Distortion	Mono/Stereo 0.2/0.3 %
Stereo Separation	1 kHz 45 dB
Alternate Channel Selectivity	± 300 kHz 60 dB
Image Rejection	98 MHz 70 dB
Tuner Output Level	1 kHz, ± 40 kHz Dev 800 mV

AM TUNER SECTION

Frequency Range	531 - 11602 kHz
Signal to Noise Ratio	50 dB
Usable Sensitivity	Loop 400 µV
Distortion	400 Hz, 30 % Mod. 0.5 %
Selectivity	± 18 kHz 70 dB

AUDIO SECTION

Power Output	
FRONT (20 Hz - 20 kHz)	8 ohms 140 W / Ch
Center (20 Hz - 20 kHz)	8 ohms 140 W / Ch
Surround (20 Hz - 20 kHz)	8 ohms 140 W / Ch
THD Front (20 Hz - 20 kHz)	8 ohms 0.05 %
Input Sensitivity/Impedance	
Linear	350 mV/ 47 Kohms
Signal to Noise Ratio	
Linear	106 dB
Frequency Response (Analog Input / Source Direct)	8 Hz - 80 kHz (± 3 dB)
(Digital Input / 96 kHz PCM)	8 Hz - 45 kHz (± 3 dB)

VIDEO

Television Format	NTSC or PAL
Input Level/Impedance	1 Vp-p/75 ohms
Output Level/Impedance	1 Vp-p/75 ohms
Video Frequency Response	5 Hz to 8 MHz (– 1 dB)
S/N	60 dB

GENERAL

Power Requirement	AC 230 V 50 Hz
Power Consumption (STEREO MODE RATED POWER)	470 W
Dimension (MAX)	
Width	458 mm
Height	190 mm
Depth	496 mm
Weight	26.5 Kg

ACCESSORIES

Remote Control Unit RC5000i	1
AA-size batteries	4
FM Feeder Antenna	1
AM Loop Antenna	1

Specifications subject to change without prior notice.

COUNTRY	COMPANY	ADDRESS
ALGERIE	Azur 2000	8, Lotissement Ben Hatadi, Alger, Algerie
ARMENIA	NGYIG Ltd.	47 A/75 St. Lalaiants, 375000 Yerevan, Armenia
AUSTRALIA	Jamo Australia Pty. Ltd.,	24 Lionel Road, Mt. Waverley, VIC 3149, Australia
AUSTRIA	Huber & Prohaska GmbH	Taborstraße 95 / Ladestraße 1, Gebäude Hangartner, A-1200 Wien, Austria
BAHREIN	Ambassador Stores	P.O. Box 237,141, Government Avenue, Manama,Bahrein
BANGLADESH	Target	1078, Ramjoy Mohanja Lane Asadgonj, Chittagong 4000, Bangladesh
BELGIUM	Van der Heyden Audio N.V.	Brusselbaan 278, 9320 Erembodegem, Belgium
BULGARIA	Ariescommerce GmbH	Makedonia Blvd. 16, 1606 Sofia, Bulgaria
CANADA	Lenbrook Industries Limited	633 Granite Court, Pickering, Ontario
CHINA	Guang Chang Audio International Co., Ltd.	No.38 Yushan Road, ShiQiao, Pan Yu, Guang Dong, China
CYPRUS	Empire Hifi systems Ltd.	P.O. Box 5604, Nicosia, Cyprus
CZECH REPUBLIC	Audio International	Sokolska 41, 67902 Rajecko, OKR,Blansko, Czech Republic
DENMARK	Audio Nord	Dali Allé 1, 9610 Noerager, Denmark
DUBAI	V.V.& SONS	P.O. Box 105, Dubai, U.A.E.
EGYPT	Solimco	9, El Attibaa St. Doki, Cairo, Egypt
ESTONIA	HiFi Club Estonia	Ehte 4, 90503 Haapsalu, Estonia
F.Y.R.O.M.	T.P. KODI	ul.Cedomir Kantargiev 21a, Skopje, Former Yugoslavian Republic of Macedonija
FINLAND	Audio Nord	Uudenmaankatu 4-6, Helsinki SF-00120, Finland
FRANCE	Marantz France	A division of Marantz Europe B.V., P.O. Box 301, 92 156 Suresnes Cedex, France
GERMANY	Marantz Deutschland	Hakenbusch 3, 49078 Osnabrück, Germany
GREECE	Adamco S.A.	188, Hippocratous Street, 11471 Athens, Greece
HEADQUARTERS EUROPE:	Marantz Europe B.V.	Building SFF-2, P.O. Box 80002, 5600 JB Eindhoven, The Netherlands
HONG KONG	Marantz Asia Ltd.	Unit 1706, Metroplaza II, 223 Hing Fong Road, Kwai Fong, N.T., Kowloon, Hong Kong
HUNGARY	Infovox Ltd.	Terez Krt.31, 1067 Budapest, Hungary
ICELAND	ID Electronics Ltd.	Armula 38, 108 Reykjavik, Iceland
INDIA	NOVA Audio Private	8,Punam Co-op.Society 29/30 Road#5, Union Park MUMBAI 400052, India
IRAN	Home Co.	5th floor no 878 Philips Building Enghelab ave, P.O. 11365/7844 Tehran, Iran
IRELAND	Marantz Ireland	Clonskeagh, Dublin 14, Ireland
ISRAEL	Elmor Ltd.	52 Heh Beiyar Street, Kikar Hamedina, Tel Aviv, Israel
ITALY	Marantz Italy	Via Casati 23, 20052 Monza (Milano), Italy, Servizio Consumatori 1678-20026, Numero Verde
IVORY COAST	Hifivoir	B.P. 2428, Abidjan 01, Ivory Coast
JAPAN	Marantz Japan Inc.	35-1 Sagami Ohno 7-Chome, Sagamihara-shi, Kanagawa 228-8505, Japan
KOREA	Mk Enterprises Ltd.	121-210, 2F Shinhan Bldg., 247-17 Seokyo-dong, Mapo-ku, Seoul, Korea
KUWAIT	alAlamiah Electronics Intl.	P.O. Box 8196, Salmiah 22052, Kuwait
LATVIA	Ace Ltd.	61, LacPlesa Str., Riga LV 1011, Latvia
LEBANON	AZ Electronics S.A., 1,	P.O. Box 11 2833, Beirut, Lebanon
LITHUANIA	Accapella Ltd.	Ausros, Vartu G/5, Pasazo SKG., 2001 Vilnius, Lithuania
MALAYSIA	Wo Kee Hong Electronics Sdn. Bhd.	102 Jalan SS 21/35, Damansara Utama, 47400 Petaling Jaya, Selangordarul Ehsan, Malaysia
MALTA	Doneo Co Ltd.	78 The Strand, Sliema SLM07, Malta
MAURITIUS	SKR Electronics Ltd.	P.O. Box 685, Bell Village, Port Louis, Mauritius
MILITARY MARKET EUROPE	PASCO GmbH	PO BOX 1280, Sandhausen 69200, Germany
NETHERLANDS	Marantz Domestic Sales	A division of Marantz Europe B.V., Building SFF2, P.O. Box 80002, 5600 JB Eindhoven, The Netherlands
NEW ZEALAND	Wildash Audio Systems	14 Malvern Road, Mt. Albert, Auckland, New Zealand
NORWAY	Audio Nord	Sandkerveien 64, Oslo 0483, Norway
OMAN	Mustafa & Jawad Trading CO.	P.O. Box 1918, Ruwi, Oman
POLAND	Philips Polska Sp. z.o.o.	Al.Jerozolimskie 195b, 02 222 Warszawa, Poland
PORTUGAL	Corel2	Comércio de Electrónica Lda., Av. Luís Bívar, No 85 A, 1050 Lisboa, Portugal
PROFESSIONAL EUROPE	Marantz Professional Products	Kingsbridge House, Padbury Oaks, 575-583 Bath Road, Longford, Middlesex UB7 0EH, U.K.
PROFESSIONAL U.S.A.	Marantz Professional Products	Distributed by: Superscope Technologies Inc., 1000 Corporate Blvd. Ste.D, Aurora, Illino
QATAR	Almana & Partners W.W.L.	P.O. Box 49, Doha, Qatar
REUNION	Vision +	180 Rue du Marechal Leclerc, 97400 Saint Denis, Ile de la Reunion
ROMANIA	Nova Music Entertainment	5, Zagazului Str. Bl.1G,apt.18, sector 1,Bucharest, Romania
RUSSIA	Absolute Audio	7/2, Montazhnaya Street, 107497 Moscow, Russia
SAUDI ARABIA	Adawlia Univ. Electr. Apl	P.O. Box 2154, Alkhobar 31952, Saudi Arabia
SINGAPORE	Forward Marketing (S) Pte. Ltd.	Wo Kee Hong Centre, 29 Leng Kee Road, Singapore 159099, Singapore
SLOVAKIA	Bis Audio s.r.o.	Nam. SNP 10, 96001 Zvolem, Slovakia
SLOVENIA	Bofex	Smartinska 152, HALA V/3, 61000 Ljubljana, Slovenia
SOUTH AFRICA	Coherent Imports (PTY) Ltd.	P.O. Box 1614, Alberton, 1450, South Africa
SPAIN	Marantz Spain	Martinez Villergas 2, Apartado 2065, Madrid 28027, Spain
SRI LANKA	The listening Room	Mezzanine Floor, The Landmark 385, Galle Road, Colombo - 3, Sri Lanka
SWEDEN	Audio Nord	Almedalsvagen 4, Gotenborg 402-23, Sweden
SWITZERLAND	Sound Company AG	Postfach, 8010 Zürich, Switzerland
SYRIA	Hamzeh & Partners	Hafez Ibrahim Str. No 117, Damascus Shalan, Syria
TAHITI	Covecolor	Av. Prince Hinoi, Cours de l'union sacré, P.O. Box 2334, Papeete, Tahiti
TAIWAN	Pai-Yuing Co. Ltd.	6th No 148 Sung Kiang Road, Taipei 10429, Taiwan R.O.C.
THAILAND	MRZ Standard Co. Ltd.	746-750 Mahachai Road, Wangburapa, Bangkok 10200, Thailand
TUNESIA	Societe EDEVIG	40, Avenue du Golfe Arabe, El Menzah, 1004, Tunesia
TURKEY	Türk Philips Ticaret A.S.	Yukari Dudullu Organize sanayi Bolgesi, 2.Cadde no.28, 81260 Umraniye-Istanbul, Turkey
U.K.	Marantz Hifi UK Ltd.	Kingsbridge House, Padbury Oaks, 575-583 Bath Road, Longford, Middlesex UB7 0EH, U.K.
U.S.A.	Marantz America Inc.	440 Medinah Road, Roselle, IL 60172, U.S.A.
YUGOSLAVIA	ITM Company	Omladinskih Brigada 86, 11070 Belgrade, Yugoslavia
EXPORT	Marantz Domestic Sales	A division of Marantz Europe BV,Building SFF2, P.O. Box 80002, 5600 JB Eindhoven, TheThe Netherlands

www.marantz.com

Manufactured under license from Dolby Laboratories. “Dolby”, “AC-3”, “Pro Logic” and the double-D symbol are trademarks of Dolby Laboratories. Confidential Unpublished Works. © 1992-1997 Dolby Laboratories, Inc. All rights reserved.

Manufactured under license from Digital Theater Systems, Inc. US Pat. No. 5,451,942 and other worldwide patents issues and pending. “DTS” and “DTS Digital Surround” are trademarks of Digital Theater Systems, Inc. © 1996 Digital Theater Systems, Inc. All rights reserved.

“Lucasfilm®” and “THX®” are registered trademarks of Lucasfilm Ltd. “SURROUND EX ™” is a trademark of Dolby Laboratories. Used under authorization.

HDCD®, HDCD®, High Definition Compatible Digital ® and Pacific Microsonics™ are either registered trademarks or trademarks of Pacific Microsonics, Inc. in the United States and/or other countries.
HDCD system manufactured under license from Pacific Microsonics, Inc. This product is covered by one or more of the following: In the USA: 5,479,168, 5,638,074, 5,640,161, 5,808,574, 5,838,274, 5,854,600, 5,864,311, 5,872,531, and in Australia: 669114. Other patents pending.

Printed in Japan

marantz® **is a registered trademark.**

00/07 MITi 326J851252